STF25 A95039
Classification: Unrestricted

Fire in tyres

Heat release rate and response of vehicles

SINTEF NBL - Norwegian Fire Research Laboratory
April 1995

SINTEF

SINTEF NBL - Norwegian Fire Research Laboratory

Address: N-7034 Trondheim, NORWAY
Location: Tiller bru, Tiller
Telephone: +47 73 59 10 78
Fax: +47 73 59 10 44
Telex: 55 620 sintf n

Enterprise No.: 948007029

SINTEF REPORT

TITLE

Fire in tyres.
Heat release rate and response of vehicles.

AUTHOR(S)

Per Arne Hansen

CLIENT(S)

Directorate for Fire and Explosion Prevention (DBE)
Swedish Rescue Services Agency (SRV)

REPORT NO.	CLASSIFICATION	CLIENT'S REF.	
STF25 A95039	Unrestricted	Arne Johansen, DBE and Gösta Berg, SRV	
CLASS. FRONT PAGE	ISBN	PROJECT NO.	NO. OF PAGES/APPENDICES
Unrestricted	82-595-9001-8	SINTEF NBL 251736	12+58
ELECTRONIC FILE CODE		DISCIPLINARY RESPONSIBILITY	
J:\PRO\251736\XPAHB001.W51		Kjell Schmidt Pedersen	
FILE CODE	DATE	RESPONSIBLE SIGNATURE	
x	1995-04-27	Kjell Schmidt Pedersen	

ABSTRACT

The main object of this study was to decide the heat release rate from burning tyres, and find the response of vehicles when exposed to a fire in the tyres. The following tests were carried out in SINTEF NBL's large scale fire test hall:

Test A	Heat release rate from the combustion of two tyres.
Test B	Heat release rate and response of an aluminium vehicle element during combustion of two tyres.
Test C	Response of an aluminium vehicle with inside lining of Plywood during combustion of two tyres.
Test D	Response of an aluminium vehicle during combustion of two tyres.

The maximum heat release rate during combustion of two tyres was about 900 kW and 1000 kW in test A and B respectively.

Openings occurred in wall and floor sections due to melting of aluminium and combustion of Plywood during testing of closed vehicles, test C and D. The fire exposure was two burning tyres. The temperaures measured inside these vehicles during testing were above the acceptable limit.

KEYWORDS	ENGLISH	NORWEGIAN
GROUP 1	Fire	Brann
GROUP 2	Car	Bil
SELECTED BY AUTHOR(S)	Tyre	Dekk
	Heat release	Varmeavgivelse
	Vehicle response	Respons på lastekasse

1 INTRODUCTION

In connection with the transport of substances and articles of class 1 there are special requirements to be fulfilled by the vehicles and their equipment. These matters are described in European agreement concerning the international carriage of dangerous goods by road /1/ and ADR Vegtransport av farlig gods - Forskrift om landtransport av farlig gods /2/.

At a request from Directorate for Fire and Explosion Prevention and Swedish Rescue Services Agency, SINTEF NBL - Norwegian Fire Research Laboratory was asked to establish a programme in connection with fire in tyres on vehicles transporting substances and articles of class 1. The main object of this study was to decide the heat release rate from burning tyres, and find the response of vehicles when exposed to a fire in the tyres.

The fire tests in this study was performed in SINTEF NBL's larga scale fire test hall under controlled temperature and ventilation conditions. Tests were done to decide both the heat release rate based on oxygen consumption, and the response of a vehicle made of aluminium sections when exposed to a fire in the tyres.

This programme was sponsored by Directorate for Fire and Explosion Prevention and Swedish Rescue Services Agency, and both Hydro Aluminium a.s and Aunes Karosseriverksted A/S supplied materials and work in this connection.

2 TEST PROGRAMME

This test programme was developed in order to decide the heat release rate from burning tyres, and the response of vehicles when exposed to a fire in the tyres. The effect of a heat shield between the tyres and the vehicle should also be revealed. The response of the vehicle should be evaluated by measuring of temperatures inside the vehicle, and by occurrence of openings through wall and floor sections. The following tests were carried out:

Test A	Heat release rate from the combustion of two tyres.
Test B	Heat release rate and response of an aluminium vehicle element during combustion of two tyres.
Test C	Response of an aluminium vehicle with inside lining of Plywood during combustion of two tyres.
Test D	Response of an aluminium vehicle during combustion of two tyres.

Video recordings and photos were taken in connection with all tests.

The tests were carried out in SINTEF NBL's large scale fire test hall under controlled temperature and ventilation conditions.

2.1 Test arrangement

The general test arrangement to create a relevant fire exposure consisted of two wheels. These wheels were mounted together by use of bolts through the fellies. The fellies were fixed to a steel pipe running through the centre openings. This steel pipe was insulated with ceramic fibre blankets, except for the part surrounded by the fellies. This arrangement is shown on the drawing in E.1.

Each of the tests in this programme was divided into two parts; pre-heating of the wheels, and combustion of the tyres after pilot ignition.

The pre-heating was done by use of a propane gas burner led into the steel pipe. The effect of this gas burner was about 700 kW. After a few minutes the uninsulated part of the pipe was red hot, and the wheels were heated by radiation from the pipe walls and by conduction through the fixing points.

After about 30 minutes with pre-heating, the two tyres were ignited by use of a small gas burner. The tyres were ignited close to the felly on the two sides facing each other. One small area on each tyre in position at about four o'clock was ignited. Each test went on until the tyres had sagged off from the fellies, and only small flames were left in the remaining parts.

For test B, C and D the arrangement as shown on E.1 was installed under a heat shield on a vehicle. There was not used a heat shield during test A.

The types of tyres used in the different tests are listed in E.2.

2.2 Heat release rate

During test A and B the heat release rate from the burning tyres were measured. These tests were based on ISO 9705 Fire tests - Full-scale room test for surface products /3/. Just parts of this ISO-standard was used in this connection. The test arrangement was placed under the hood connected to the exhaust duct as shown on the drawing in E.3.

All the combustion gases from the burning tyres should be collected by the hood and exhaust duct, and the heat release rate is calculated based on the oxygen consumption.

In addition to the uncertainties in the method itself, it should be taken into consideration that when the smoke development was at its maximum, the hood was not able to collect all the combustion gases. This will lead to a lower value of heat release rate.

2.3 Temperature measurements

The temperature measurements in connection with the four tests were done by use of thermocouples as described in E.4. The rating of the thermocouples must be taken into consideration when evaluating the results.

The location of the thermocouples on different parts of the test specimens is shown in connection with the temperature diagrams.

3 TEST A

The purpose of test A was to decide the heat release rate during combustion of two tyres. The test was performed as described in chapter 2.

A short summary and observations in connection with the test are given in A.3.

3.1 Heat release rate

The diagram in A.2 shows the heat release rate during combustion of the tyres. The maximum value of 878 kW was recorded about 30 minutes after pilot ignition.

3.2 Temperature measurements

The diagram in A.1 shows the temperature development during the pre-heating period. Thermocouple no. 23 measured the temperature 20 mm into the tyre. Thermocouples nos. 17 - 22 measured the temperature on the surface of the fellies.

3.3 Photos

The photos in A.4 - A.7 show the test arrangement, and the development of the fire in the two tyres.

4 TEST B

The purpose of test B was to decide the heat release rate and measure the temperature development on an aluminium vehicle element during combustion of two tyres. The test was performed as described in chapter 2.

The vehicle element is shown on the drawings in E.6 and E.7.

A short summary and observations in connection with the test are given in B.3.

4.1 Heat release rate

The diagram in B.2 shows the heat release rate during combustion of the tyres. The maximum value of 964 kW was recorded about 28 minutes after pilot ignition. The logging was stopped 48 minutes after pilot ignition.

4.2 Temperature measurements

The diagram in B.1 shows the temperature development during the pre-heating period. Thermocouple no. 19 measured the temperature 20 mm into the tyre. Thermocouples nos. 20 - 22 measured the temperature on the surface of one of the fellies.

The diagrams in B.4 - B.7 show the temperature measurements during combustion of the tyres as a function of time in minutes from pilot ignition.

The diagram in B.4 shows that the temperatures measured on both sides of the 2 mm heat shield, thermocouples 1+5 and 4+6, are very similar to each other in the first part of the test. The differences that occur in the second part of the test are most likely caused by direct flame exposure on the underside of the heat shield. These thermocouples are not rated for continuous temperatures above 704°C.

4.3 Photos

The photos in B.8 - B.10 show the test arrangement, and the development of the fire in the two tyres. Photo 5.B shows the melted part of the aluminium sections after testing.

5 TEST C

The purpose of test C was to measure the temperature development and observe damages in an aluminium vehicle during combustion of two tyres. The test was performed as described in chapter 2.

The vehicle, partly lined with Plywood, is shown on the drawings in E.8 - E.10. During testing, two wooden pallets with concrete blocks were placed in the vehicle, on the same side as the fire exposed heat shield. This made a total load of about 13.3 kN.

A short summary and observations in connection with the test are given in C.2.

5.1 Temperature measurements

The diagram in C.1 shows the temperature development during the pre-heating period. Thermocouple no. 1 measured the temperature 20 mm into the tyre. Thermocouples nos. 2 - 4 measured the temperature on the surface of one of the fellies.

The diagrams in C.3 - C.11 show the temperature measurements during combustion of the tyres as a function of time in minutes from pilot ignition.

Between 27 and 28 minutes an opening in the floor and/or wall sections must have occurred. This can be seen from the air temperature registrations in C.5, and the observation after 27 minutes in C.2. Some of the thermocouple wires inside the vehicle are led by this area where the opening occurred. The direct exposure from the flames have damaged some of the wires, and caused interruptions on some readings. These thermocouple wires are not rated for continuous temperatures above 482°C.

The above mentioned conditions must be taken into consideration when evaluating the results from the temperature measurements after about 27 minutes in C.6, C.7, C.9, C.10 and C.11. However, these registrations indicates serious damage of the vehicle at this time from pilot ignition.

Thermocouple nos. 17 in C.6, 19 in C.7, 24 and 27 in C.9, 22 and 33 in C.11 are not influenced by the direct flame exposure.

5.2 Photos

The photos in C.12 - C.16 show the test arrangement, the development of the fire in the two tyres and the response of the vehicle after testing.

6 TEST D

The purpose of test D was to measure the temperature development and observe damages in an aluminium vehicle during combustion of two tyres. The test was performed as described in chapter 2.

The vehicle is shown on the drawings in E.8 - E.10. During testing, two wooden pallets with concrete blocks were placed on an aluminium flooring system in the vehicle. This system is called "punched hole plank ALN234", and is shown in D.14 and E.11. The pallets were placed on the same side of the vehicle as the fire exposed heat shield. This made a total load of about 13.3 kN.

The damages made on the vehicle during test C were repaired, and the openings were closed with aluminium plates fixed by use of rivets. The joints were sealed with strips of ceramic fibre insulation. The arrangement for test D was on the opposite side of the vehicle.

A short summary and observations in connection with the test are given in D.2.

6.1 Temperature measurements

The diagram in D.1 shows the temperature development during the pre-heating period. Thermocouple no. 1 measured the temperature 20 mm into the tyre. Thermocouples nos. 2 - 4 measured the temperature on the surface of one of the fellies.

The diagrams in D.3 - D.10 show the temperature measurements during combustion of the tyres as a function of time in minutes from pilot ignition.

Some of the thermocouples in the diagram in D.3 are damaged before the end of the test. These thermocouple wires are not rated for continuous temperatures above 704°C.

6.2 Photos

The photos in D.11 - D.14 show the test arrangement, the development of the fire in the two tyres, and the response of the vehicle after testing.

7 SUMMARY AND CONCLUSIONS

The main object of this study carried out at a request from Directorate for Fire and Explosion Prevention and Swedish Rescue Service Agency was to decide the heat release rate from burning tyres, and find the response of vehicles when exposed to a fire in the tyres. The following tests were carried out:

Test A	Heat release rate from the combustion of two tyres.
Test B	Heat release rate and response of an aluminium vehicle element during combustion of two tyres.
Test C	Response of an aluminium vehicle with inside lining of Plywood during combustion of two tyres.
Test D	Response of an aluminium vehicle during combustion of two tyres.

The following conclusions can be drawn based on the results from these tests:

The heat release rate development in test A and B was very similar to each other. They both reached their maximum value about 30 minutes after pilot ignition. Because of the fact that the hood was not able to collect all the combustion gases when the smoke development was at its maximum, it can be concluded that the heat release rate in test A and B was about 900 kW and 1000 kW respectively. The difference in heat release rate between test A and B is related to the difference in the dimension of the tyres.

The comparisions between the results from temperature measurements in connection with the vehicle element in test B and the closed vehicle in test D are as follows:

The temperature development measured in the air outside the vehicle above the heat shield, 200 mm above the floor level (B.5 and D.4), gives the same maximum temperature of about 800°C.

The temperatures measured on the inside of the wall sections 100 mm above the floor level (B.6 and D.6), indicates the same maximum temperature level above the mid section and the ends of the heat shield, about 600°C and 400°C respectively.

The temperatures measured inside the closed vehicle on the floor sections in test D (D.8) are considerable higher than the corresponding measurements in test B (B.7).

During test C, serious damage of the vehicle occurred between 27 and 28 minutes after pilot ignition of the tyres. The temperatures inside the vehicle increased very rapidly, most likely caused by openings in the floor and wall sections due to melting of aluminium and combustion of Plywood lining.

The temperatures measured in test D on the aluminium beams on the vehicle floor where the cargo is supposed to be placed, exceeded 150°C 15 minutes after pilot ignition of the tyres (D.9 and D.10). The temperature measurements in D.5, D.8, D.9 and D.10 indicates that openings in the wall and/or floor sections occurred about 26 minutes after pilot ignition of the tyres.

8 REFERENCES

/1/ European agreement concerning the international carriage of dangerous goods by road (ADR) and protocol of signature, Economic Commission for Europe - Inland Transport Committee, United Nations New York and Geneva, 1994.

/2/ ADR Vegtransport av farlig gods - Forskrift om landtransport av farlig gods. Europeisk avtale om internasjonal vegtransport av farlig gods, Elanders Forlag.

/3/ ISO 9705, Fire tests - Full-scale room test for surface products, First edition, 1993-06-15.

/4/ ISO 834, Fire-resistance tests - Elements of building construction, First edition, 1975-11-01.

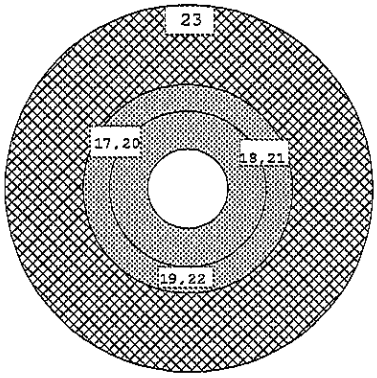

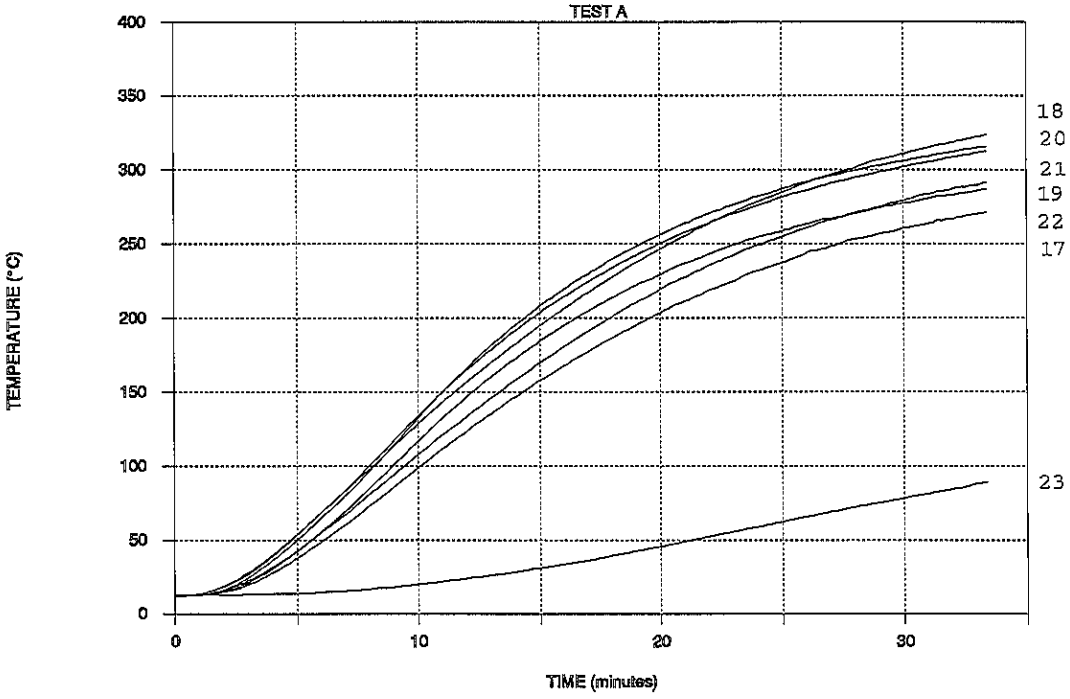

TC 17 - 23

Test A. Position of thermocouples and temperature development in the tyre (23) and on the felly surface (17-22) during pre-heating, before pilot ignition. Position of thermocouples is also shown in E.1.

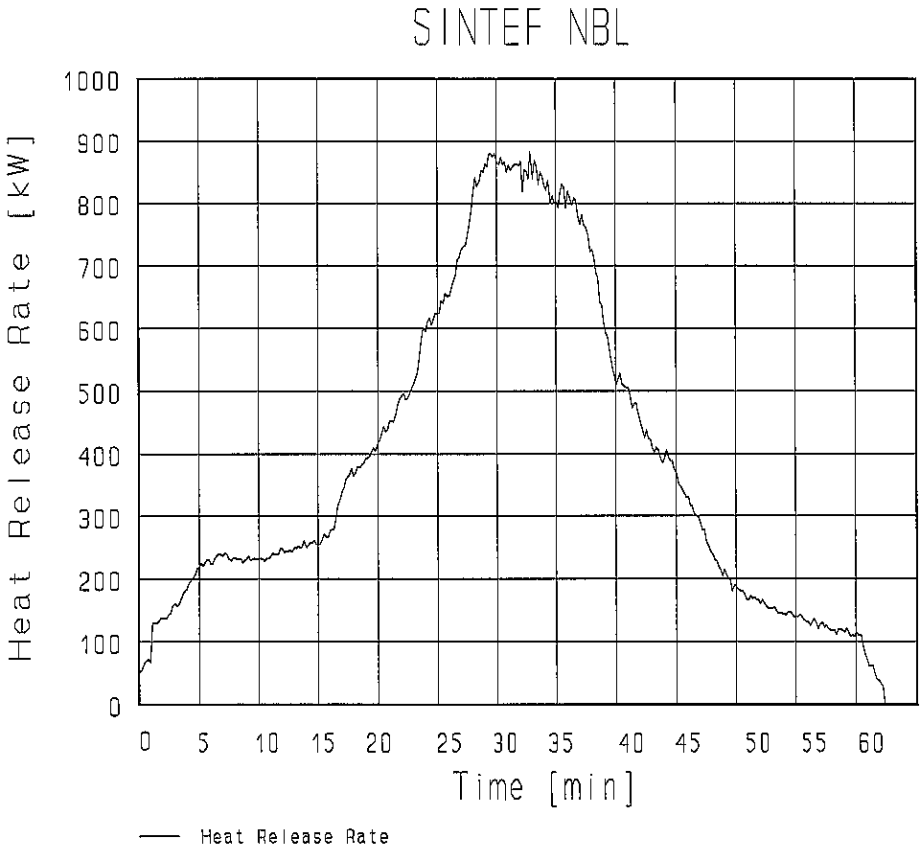

Test A. Heat release rate [kW] during combustion of the tyres. Maximum heat release was 878 kW. Time in minutes from pilot ignition.

TEST A. OBSERVATIONS DURING TESTING.

The pilot ignition of the tyres was done after 32 minutes of pre-heating. At the end of the pre-heating period there was some evaporation from the tyres. After about 8 minutes of pre-heating the uninsulated part of the steel pipe running through the fellies was red hot.

00 min.	Pilot ignition of the tyres. Both tyres were ignited close to the felly on the two sides facing each other. One area on each tyre in position at about four o'clock was ignited.
01 „ 30 sec.	The gas supply to the pre-heating is closed.
15 „	The lower parts of the tyres are ignited by burning parts falling down from the upper half of the tyres.
31 „	The whole surface of the two tyres is burning.
35 „	The tyres start to sag off from the fellies.
48 „	Most of the remaining material from the tyres are laying on the floor close to the fellies. Just small flames in these parts.
62 „	The flames in the remaining parts of the tyres are put out by use of water.

PHOTOS FROM TEST A

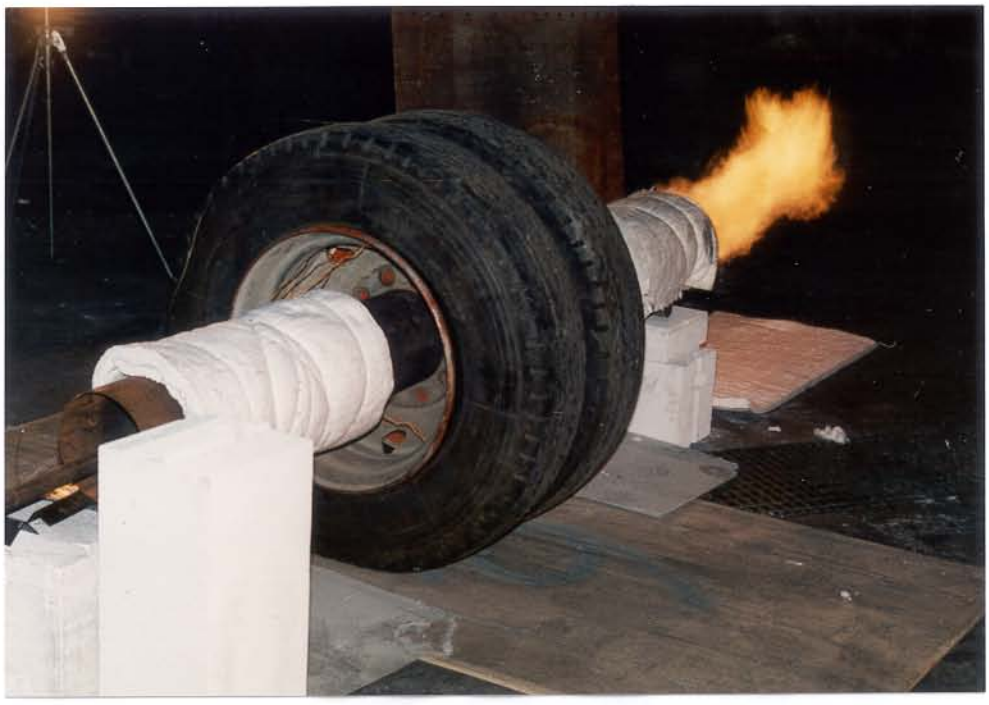

Photo 1.A *The test arrangement during pre-heating. Notice the uninsulated part of the steel pipe running through the fellies.*

Photo 2.A *The two tyres after pilot ignition.*

Photo 3.A *7 minutes after pilot ignition. Notice the burning parts on the floor.*

Photo 4.A *18 minutes after pilot ignition.*

Photo 5.A *28 minutes after pilot ignition.*

Photo 6.A *42 minutes after pilot ignition.*

Photo 7.A *59 minutes after pilot ignition.*

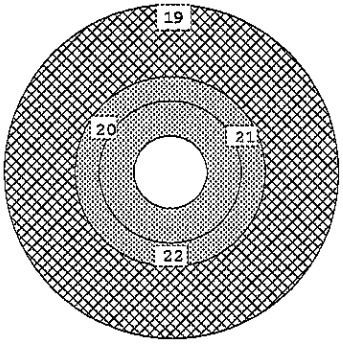

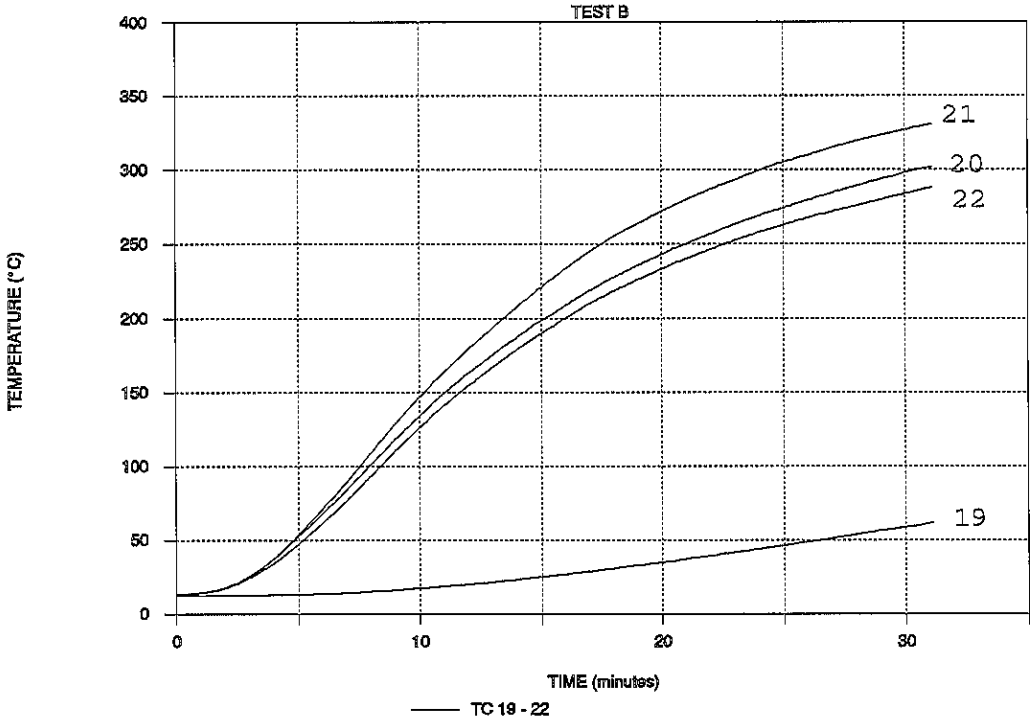

Test B. Position of thermocouples and temperature development in the tyre (19) and on the felly surface (20-22) during pre-heating, before pilot ignition. Position of thermocouples is also shown in E.1.

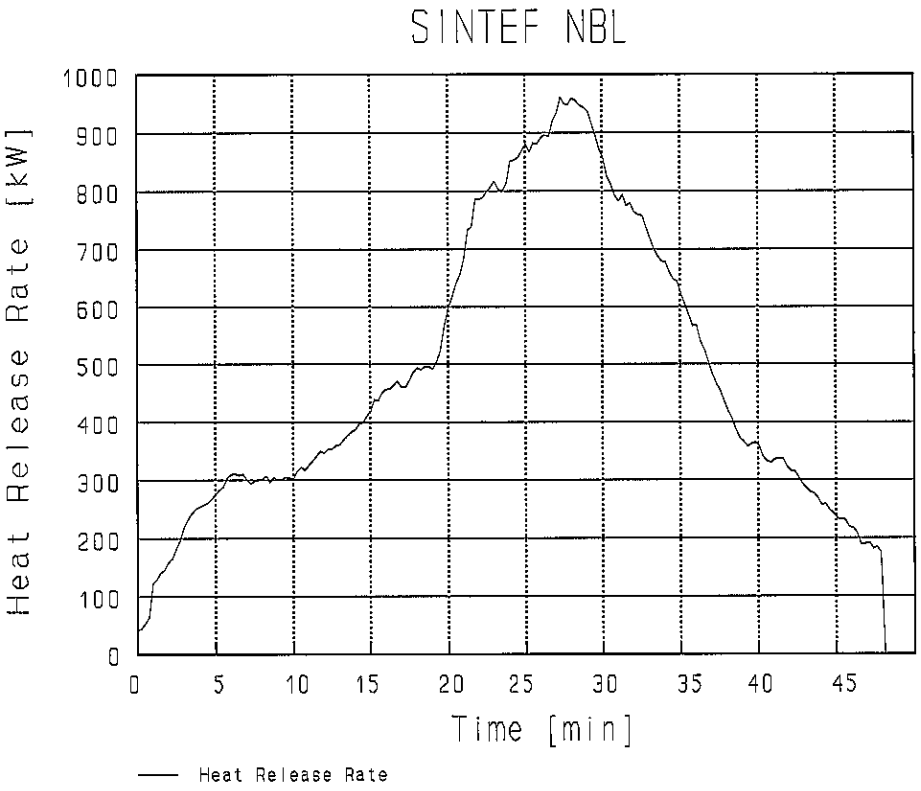

Test B. Heat release rate [kW] during combustion of the tyres. Maximum heat release was 964 kW. Time in minutes from pilot ignition.

TEST B. OBSERVATIONS DURING AND AFTER TESTING.

The pilot ignition of the tyres was done after 30 minutes of pre-heating. At the end of the pre-heating period there was some evaporation from the tyres. After about 8 minutes of pre-heating the uninsulated part of the steel pipe running through the fellies was red hot.

00 min.	Pilot ignition of the tyres. Both tyres were ignited close to the felly on the two sides facing each other. One area on each tyre in position at about four o'clock was ignited.
01 „ 30 sec.	The gas supply to the pre-heating is closed.
11 „	The heat shield above the wheels is red hot, and slightly buckled.
16 „	The lower parts of the tyres are ignited by burning parts falling down from the upper half of the tyres.
30 „	The whole surface of the two tyres is burning.
34 „	The tyres start to sag off from the fellies.
39 „	Parts of the floor/corner section above the heat shield are melted.
46 „	Most of the remaining material from the tyres are laying on the floor close to the fellies. Just small flames in these parts.
54 „	The flames in the remaining parts of the tyres are put out by use of water.

The vehicle element was inspected after cooling. The floor/corner section above the heat shield was melted in a length of about 400 mm. The outer plate in one of the wall sections above the heat shield was melted in a height of about 500 mm from the floor/corner section.

It was not observed any openings through floor or wall sections.

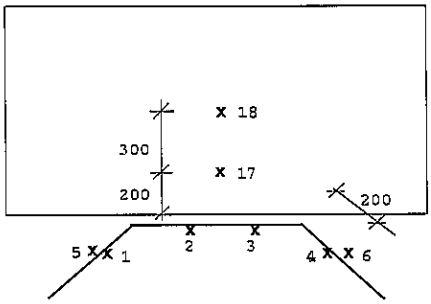

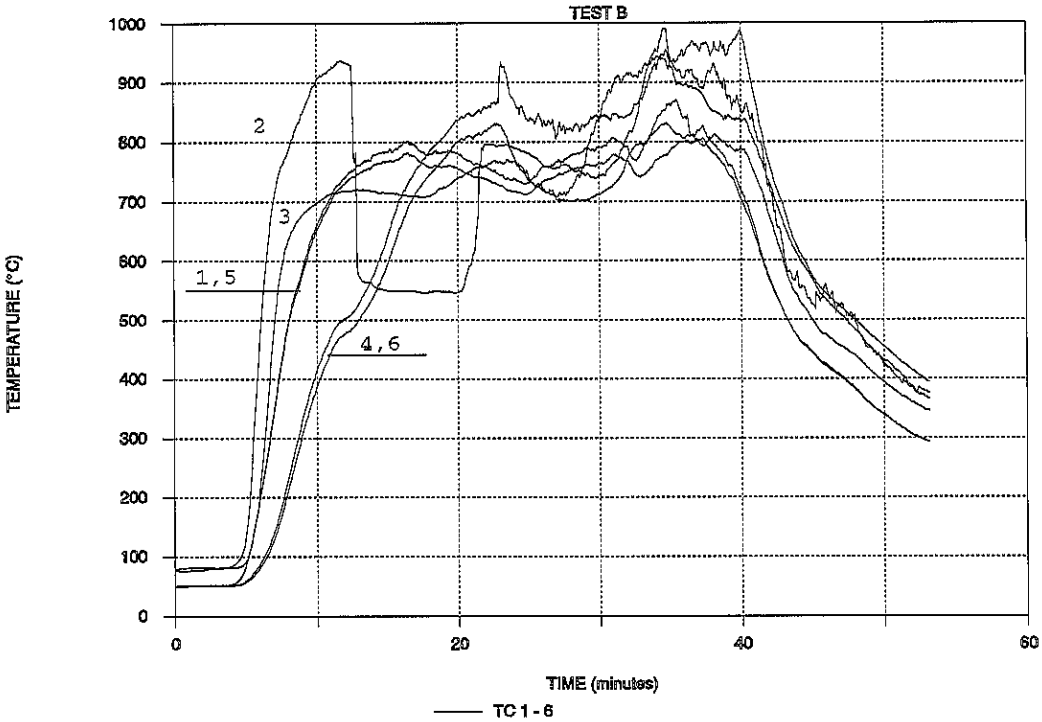

Test B. Position of thermocouples and temperature development on the heat shield during combustion of the tyres. Time in minutes from pilot ignition.

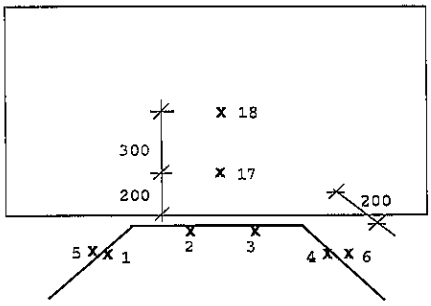

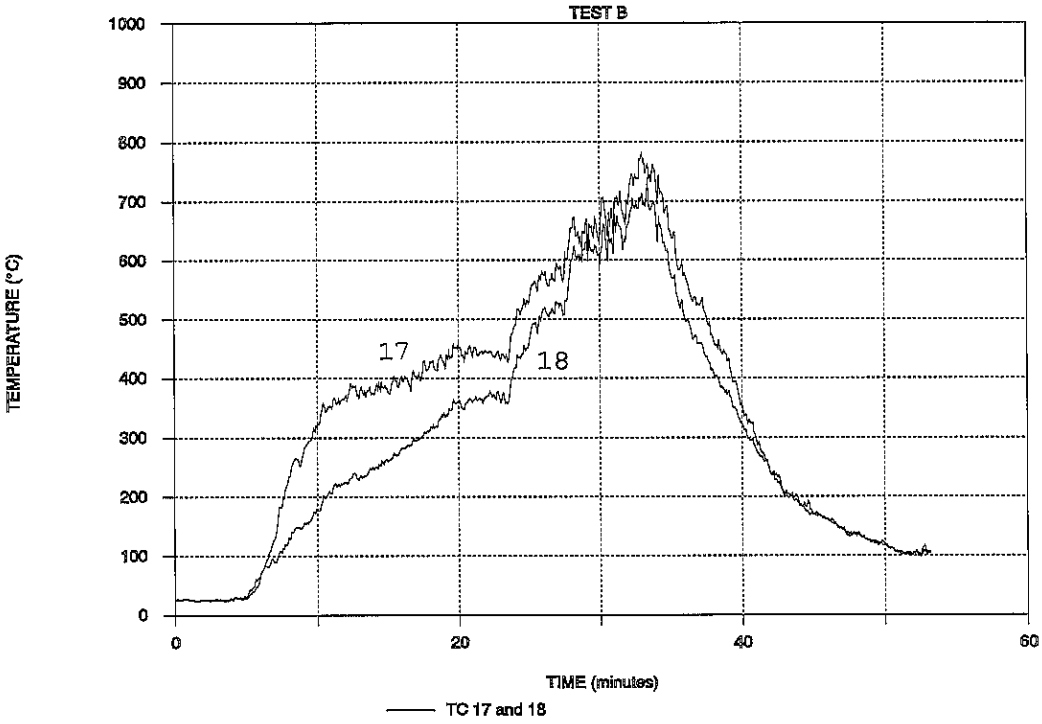

Test B. Position of thermocouples and temperature development in the air above the heat shield during combustion of the tyres. See detailed sketch in C.4. Time in minutes from pilot ignition.

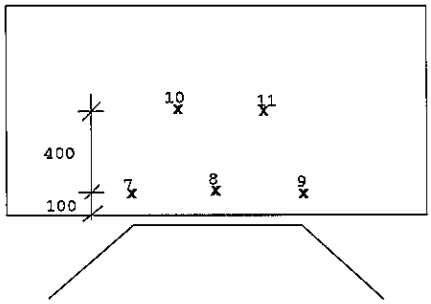

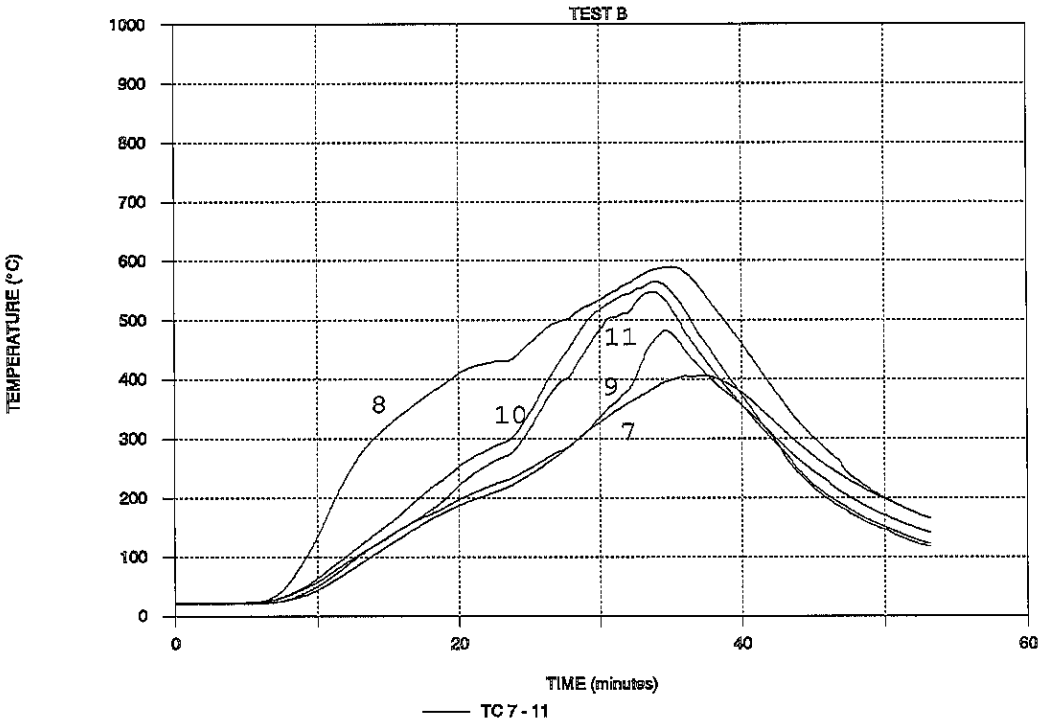

Test B. Position of thermocouples and temperature development on the wall sections during combustion of the tyres. Time in minutes from pilot ignition.

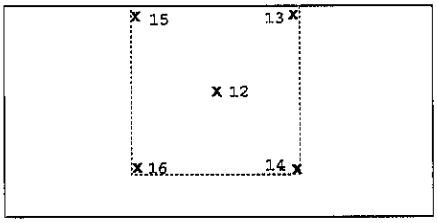

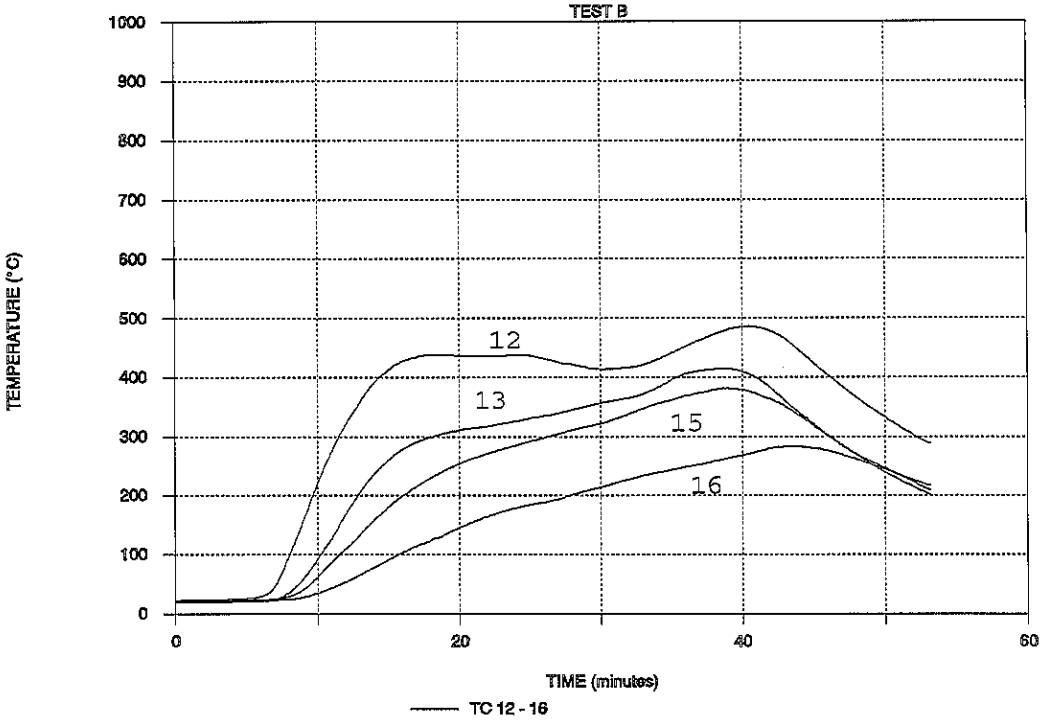

Test B. Position of thermocouples and temperature development on the floor sections during combustion of the tyres. Thermocouple no. 14 was out of function. Time in minutes from pilot ignition.

PHOTOS FROM TEST B

Photo 1.B *Test arrangement with heat shield and vehicle element during pre-heating.*

Photo 2.B *11 minutes after pilot ignition.*

Photo 3.B *30 minutes after pilot ignition.*

Photo 4.B *34 minutes after pilot ignition.*

Photo 5.B *The melted parts of the floor/corner section and the wall section after testing.*

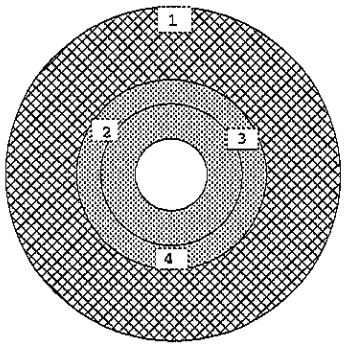

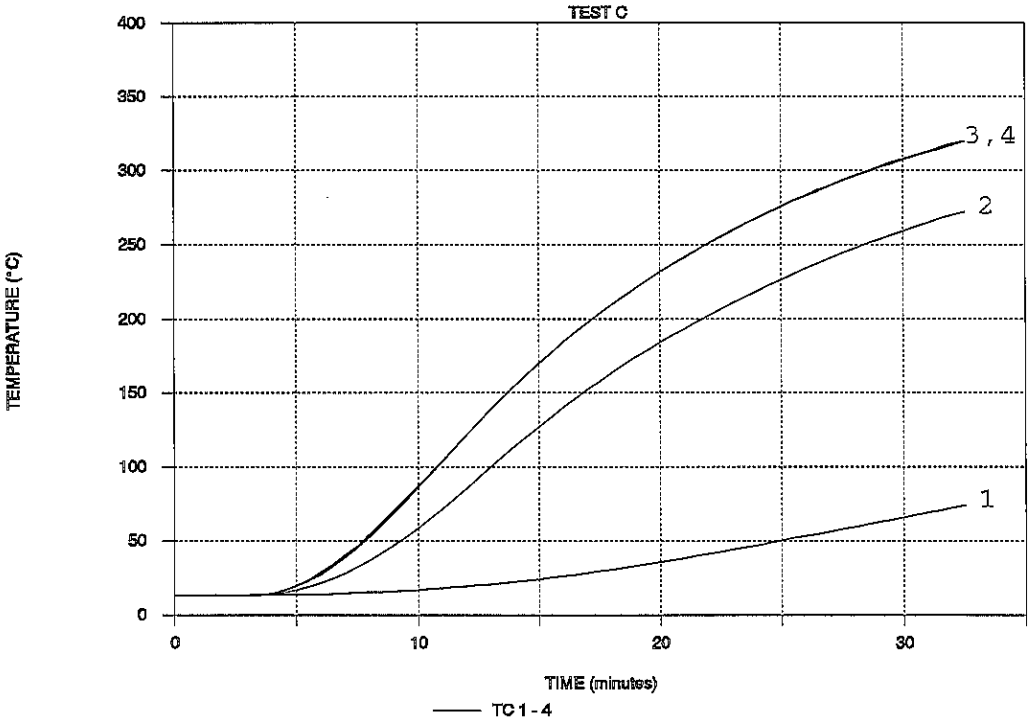

Test C. Position of thermocouples and temperature development in the tyre (1) and on the felly surface (2-4) during pre-heating, before pilot ignition. Position of thermocouples is also shown in E.1.

TEST C. OBSERVATIONS DURING AND AFTER TESTING.

The pilot ignition of the tyres was done after 33 minutes of pre-heating. At the end of the pre-heating period there was some evaporation from the tyres.

00 min.	Pilot ignition of the tyres. Both tyres were ignited close to the felly on the two sides facing each other. One area on each tyre in position at about four o'clock was ignited.
01 " 30 sec.	The gas supply to the pre-heating is closed.
20 "	Flames comming out from the floor/corner section above the heat shield. This is most likely combustible gases from the Plywood lining.
27 "	Melted aluminium flows down from the sections above the heat shield. Increased flame development from the combustible material inside the vehicle.
37 "	The tyres have sagged off from the fellies.
39 "	Flames can be seen comming out from an opening in the wall sections.
41 "	Most of the remaining material from the tyres are laying on the floor close to the fellies. Just small flames in these parts.
44 "	The flames in the remaining parts of the tyres are put out by use of water.

The vehicle was inspected after cooling. The aluminium wall sections were melted above the heat shield in maximum height and width of about 650 mm. The Plywood lining was carbonized in this area in a width of about 800 mm. The aluminium floor sections were melted above the heat shield in a length of about 1400 mm, and a width of about 1150 mm. The Plywood lining was carbonized in this area. The wooden pallets were totally damaged (carbonized).

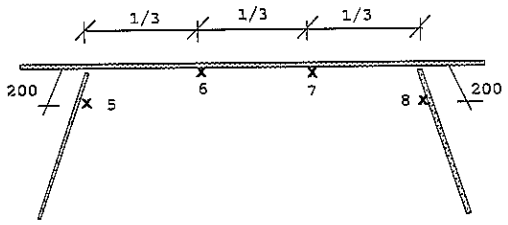

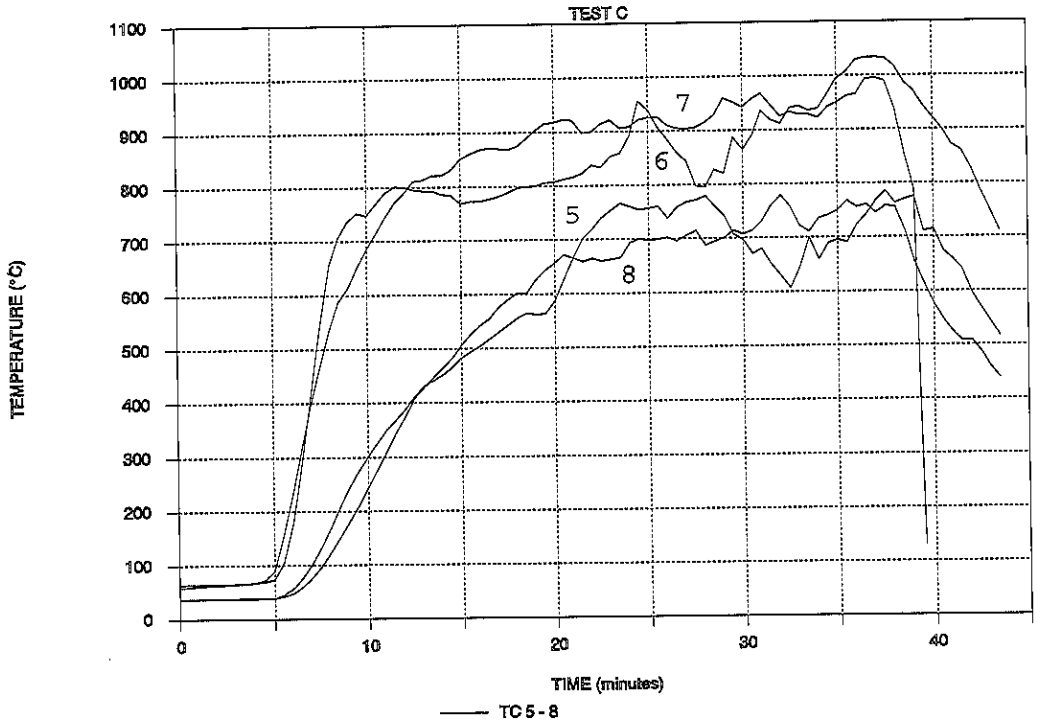

Test C. Position of thermocouples and temperature development on the heat shield during combustion of the tyres. Time in minutes from pilot ignition.

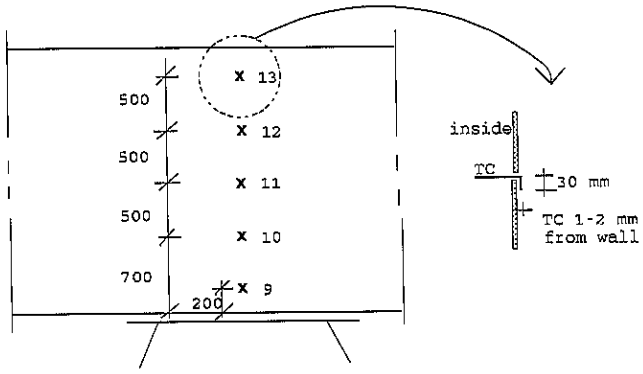

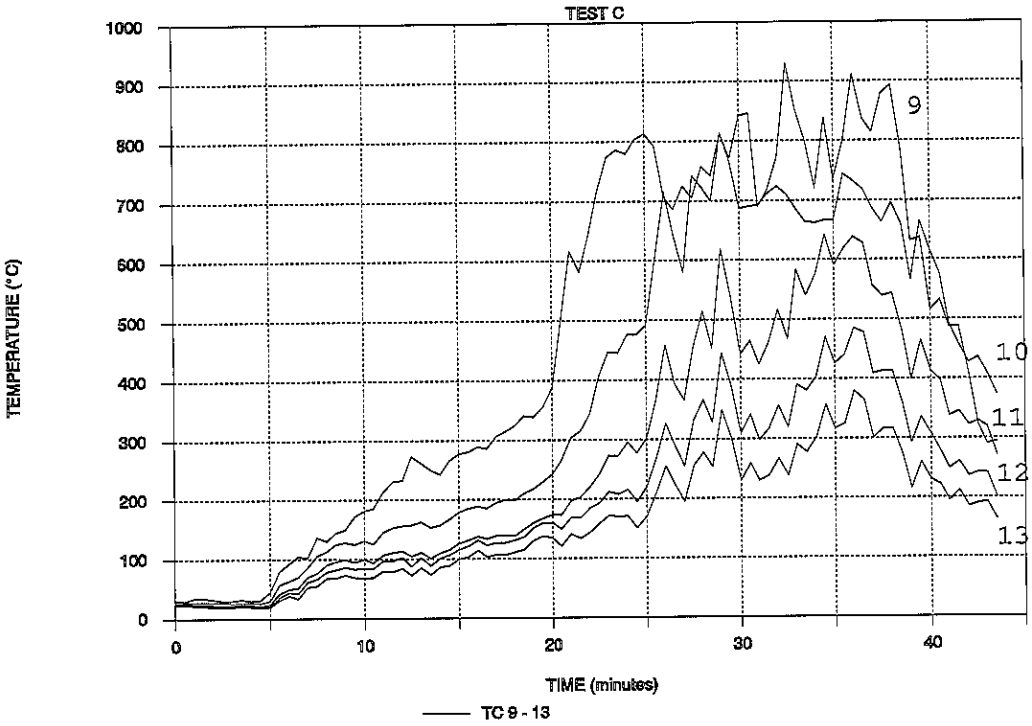

Test C. Position of thermocouples and temperature development in the air above the heat shield during combustion of the tyres. Time in minutes from pilot ignition.

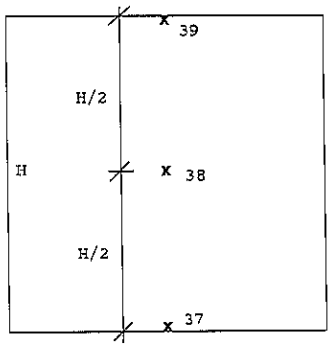

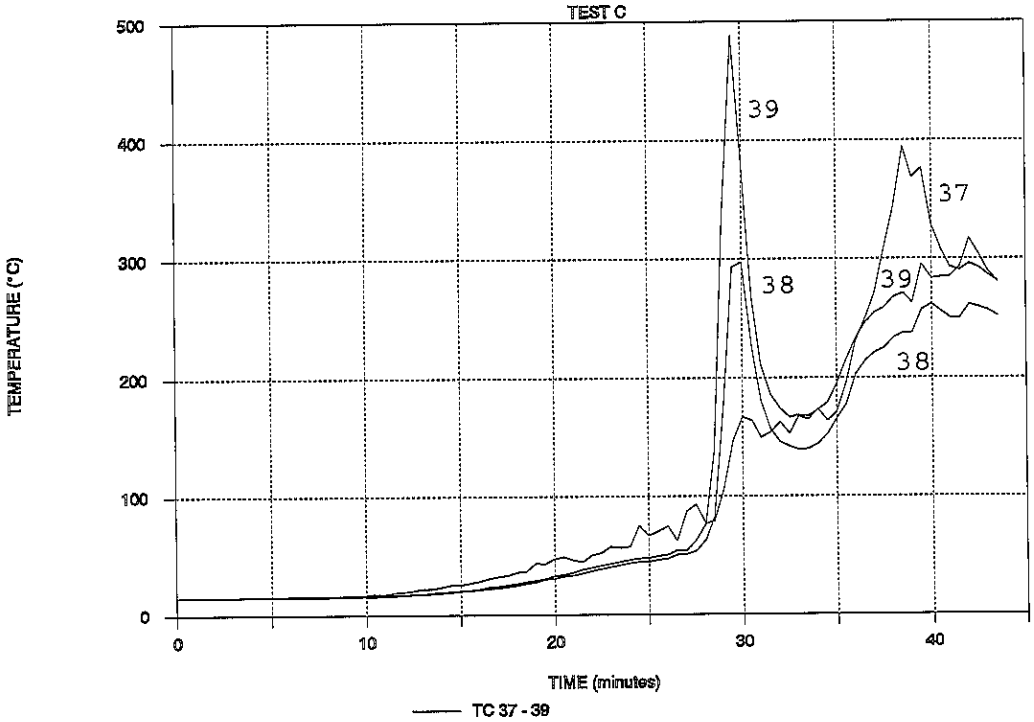

Test C. Position of thermocouples and temperature development in the air inside the vehicle during combustion of the tyres. Time in minutes from pilot ignition.

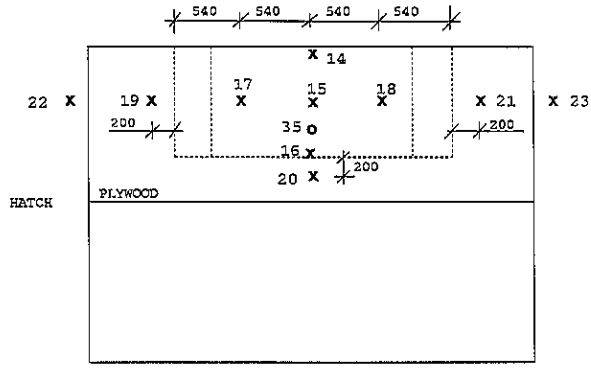

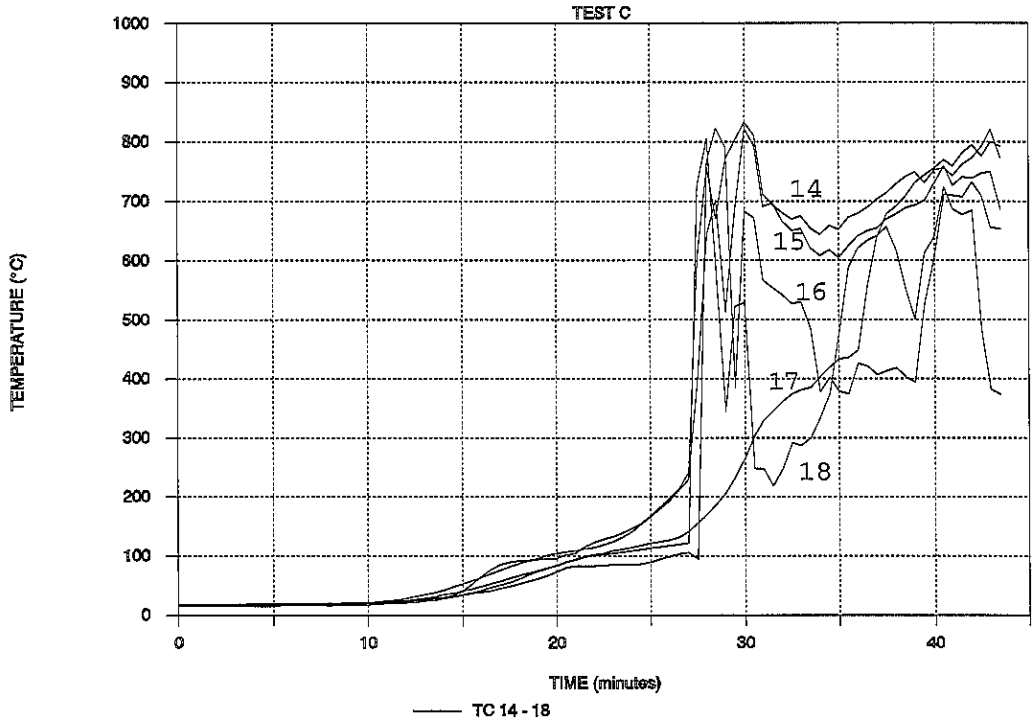

Test C. Position of thermocouples and temperature development on the Plywood lining on the floor inside the vehicle during combustion of the tyres. Time in minutes from pilot ignition.

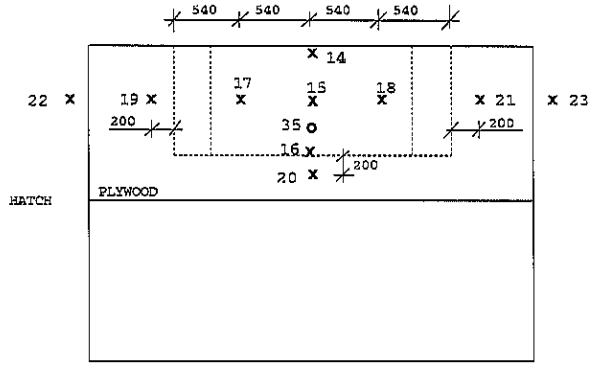

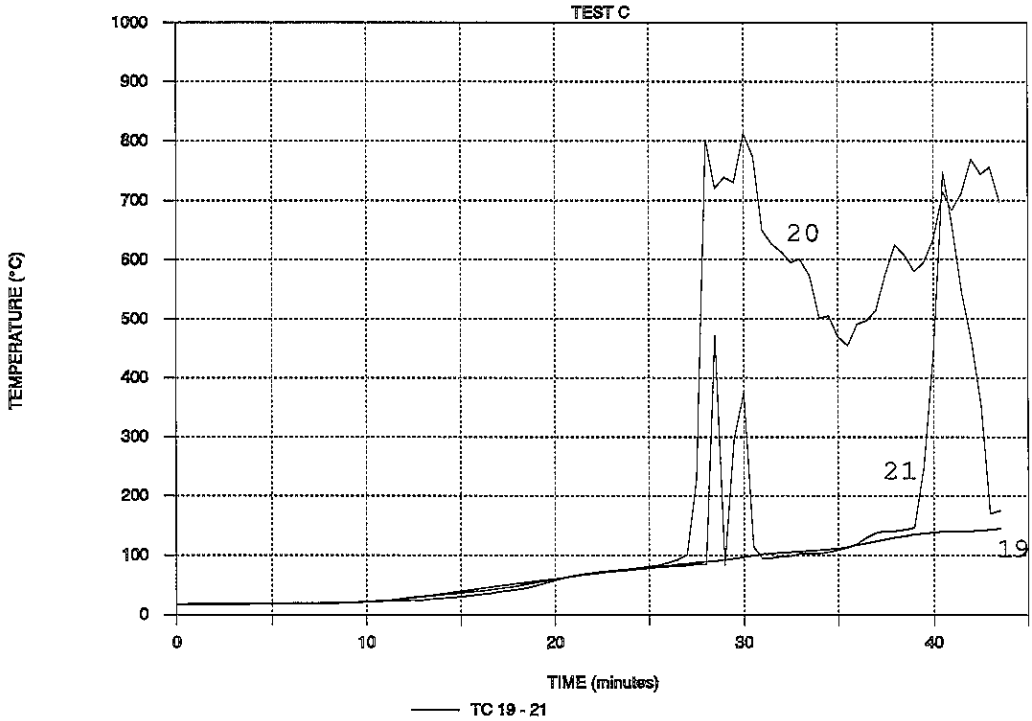

Test C. Position of thermocouples and temperature development on the Plywood lining on the floor inside the vehicle during combustion of the tyres. Time in minutes from pilot ignition.

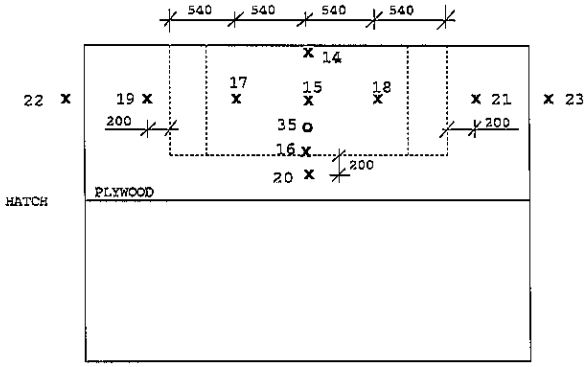

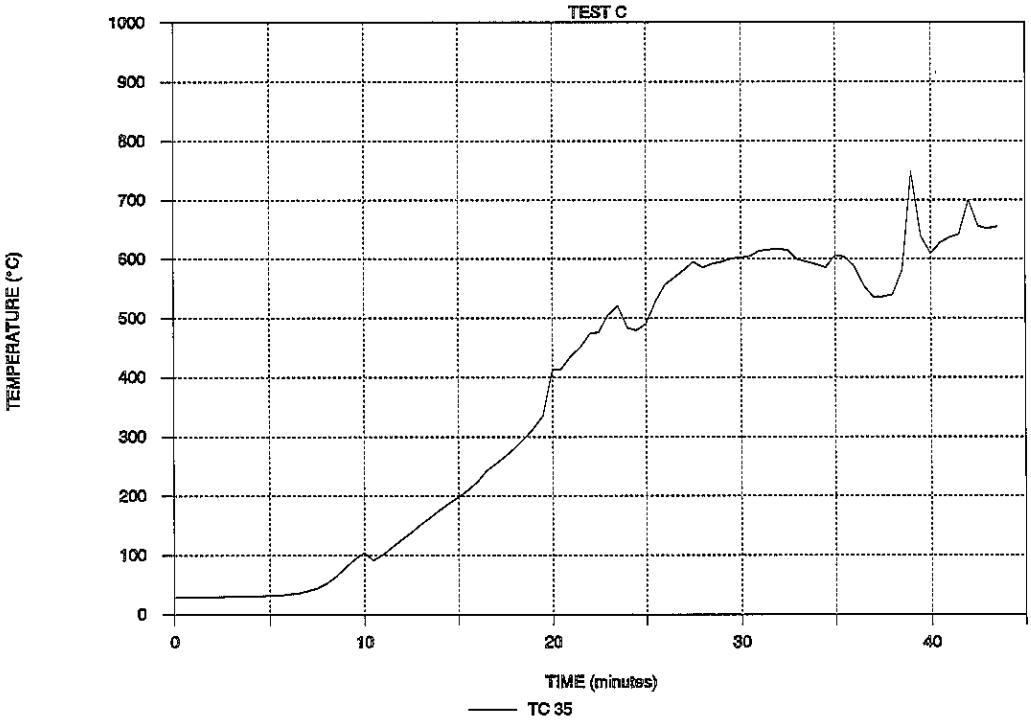

Test C. Position of thermocouple (35) and temperature development between the Plywood lining and the floor sections inside the vehicle during combustion of the tyres. Time in minutes from pilot ignition.

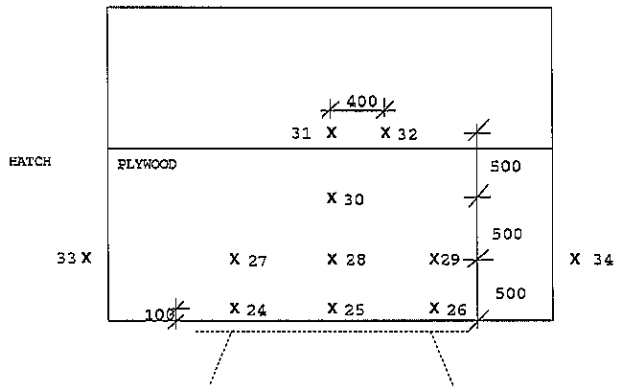

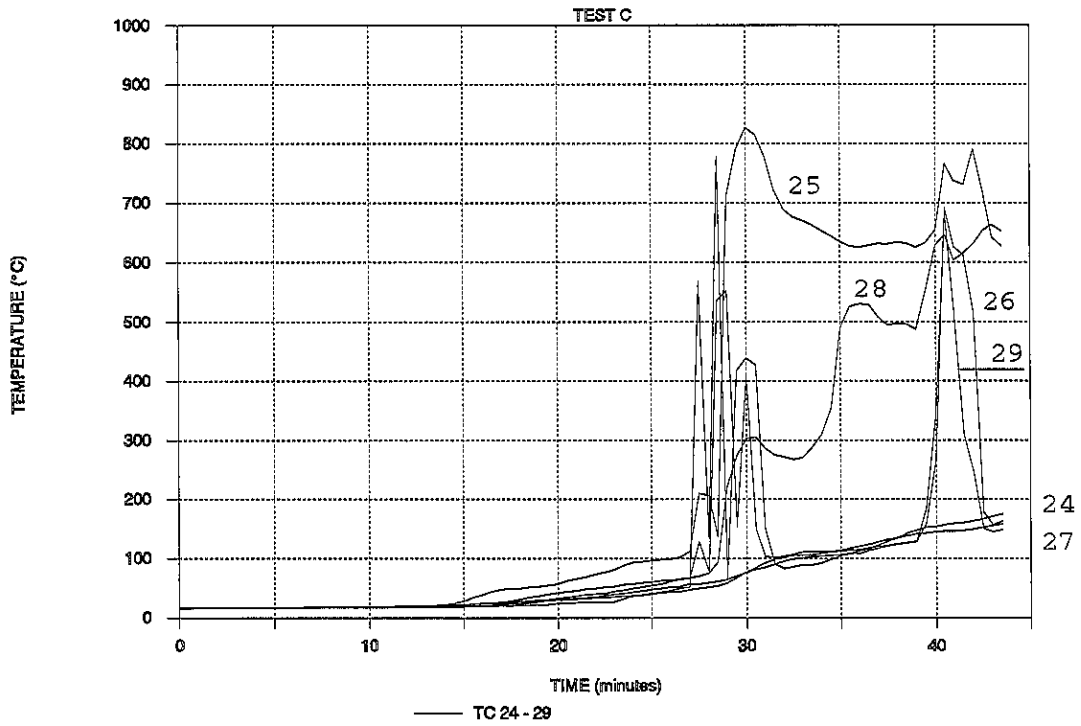

Test C. Position of thermocouples and temperature development on the Plywood lining on the wall inside the vehicle during combustion of the tyres. Time in minutes from pilot ignition.

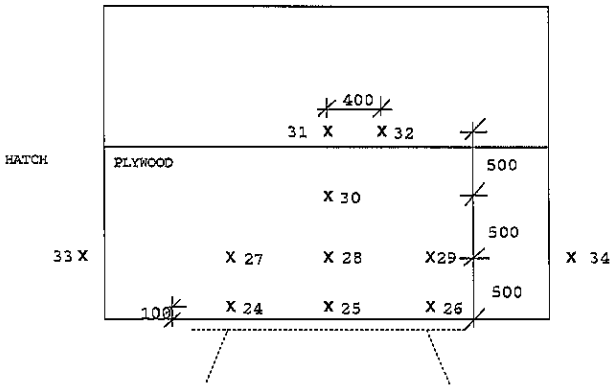

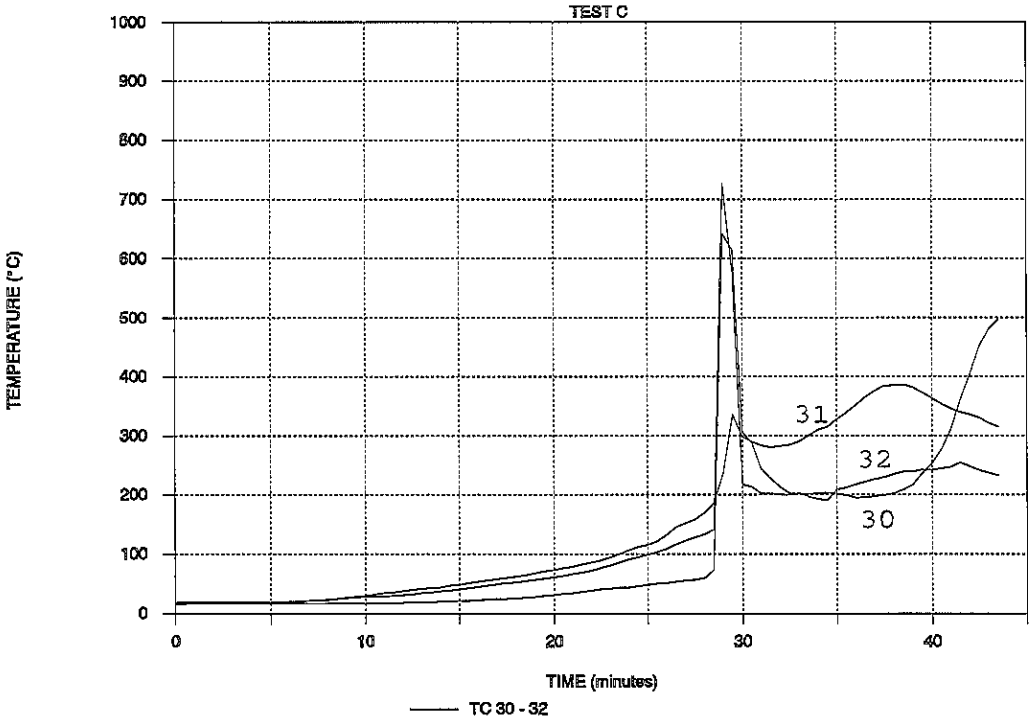

Test C. Position of thermocouples and temperature development on the Plywood lining on the wall (30) and on the aluminium wall sections (31 and 32) inside the vehicle during combustion of the tyres. Time in minutes from pilot ignition.

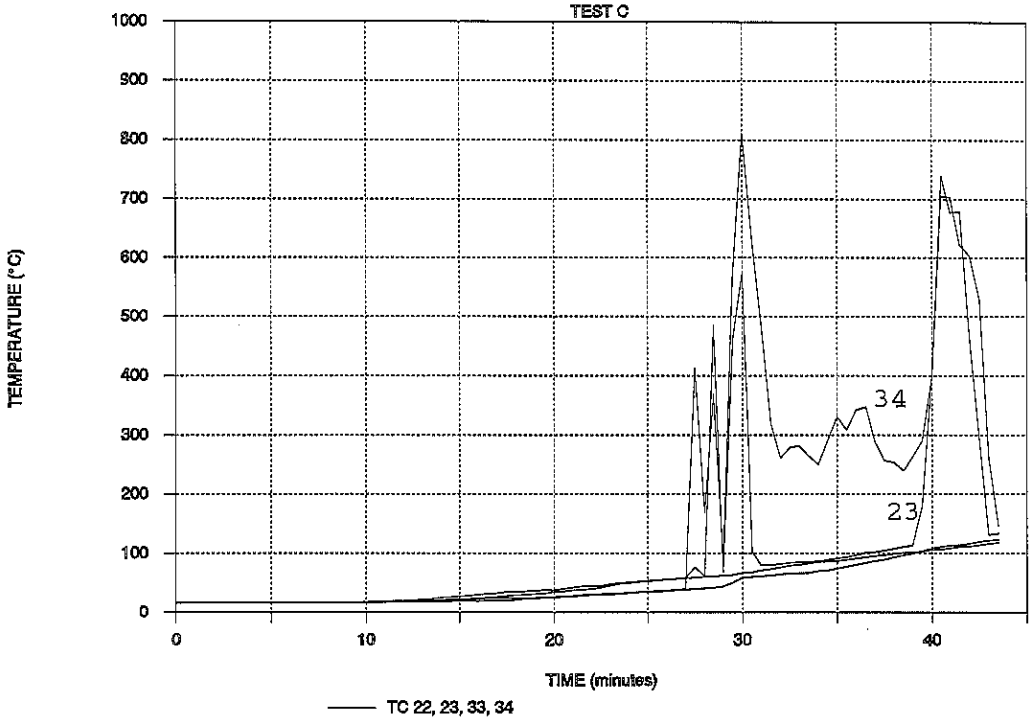

Test C. Temperature development on the aluminium wall sections in the end-walls. Thermocuoples 22 and 23 are located 100 mm above the floor. Thermocouples 33 and 34 are located 100 mm from the wall corner. See the sketches on page C.6 and C.9. Time in minutes from pilot ignition.

PHOTOS FROM TEST C

Photo 1.C *Inside the vehichle before testing. Notice the wooden pallets with the concrete blocks.*

Photo 2.C *The test arrangement during pre-heating.*

Photo 3.C *12 minutes after pilot ignition.*

Photo 4.C *20 minutes after pilot ignition. Notice the flames comming out above the heat shield.*

Photo 5.C *29 minutes after pilot ignition.*

Photo 6.C *37 minutes after pilot ignition.*

Photo 7.C *Outside the vehicle after testing.*

Photo 8.C *Inside the vehichle after removal of the load.*

Photo 9.C *Inside the vehichle after removal of the Plywood lining.*

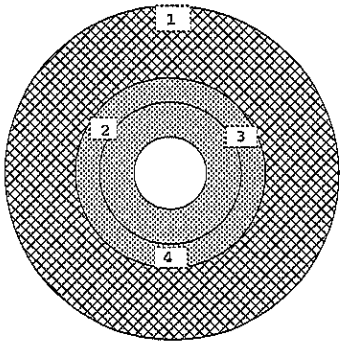

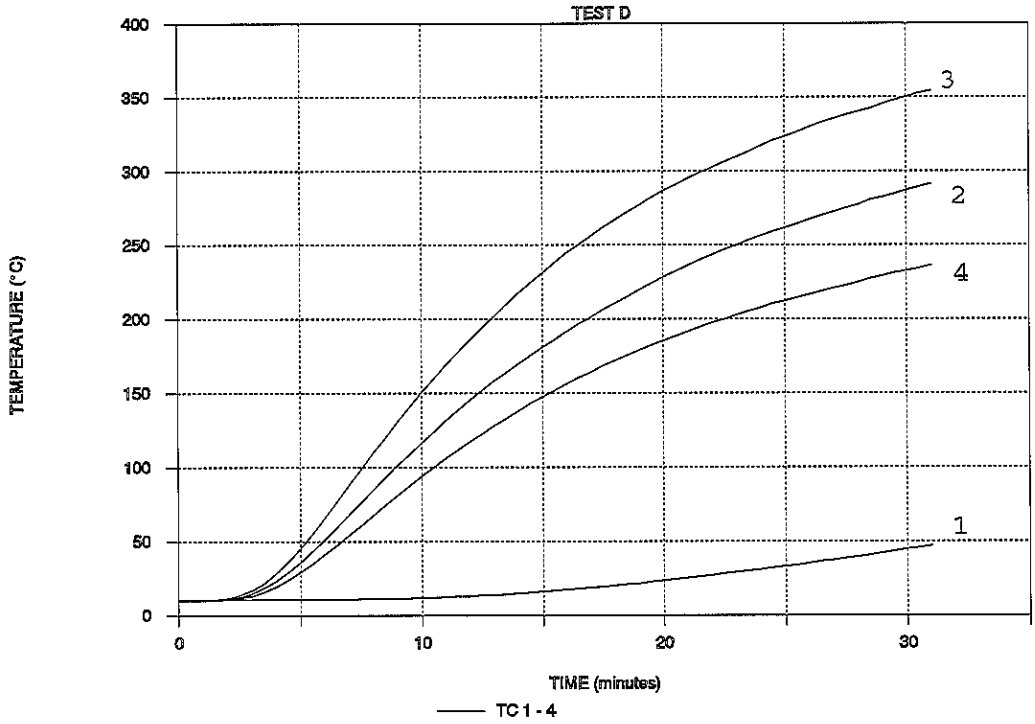

Test D. Position of thermocouples and temperature development in the tyre (1) and on the felly surface (2-4) during pre-heating, before pilot ignition. Position of thermocouples is also shown in E.1.

TEST D. OBSERVATIONS DURING AND AFTER TESTING.

The pilot ignition of the tyres was done after 30 minutes of pre-heating. At the end of the pre-heating period there was some evaporation from the tyres.

00 min.	Pilot ignition of the tyres. Both tyres were ignited close to the felly on the two sides facing each other. One area on each tyre in position at about four o'clock was ignited.
01 „ 30 sec.	The gas supply to the pre-heating is closed.
24 „	Melted aluminium flows down from the wall sections above the heat shield.
30 „	The tyres start to sag off from the fellies.
38 „	Most of the remaining material from the tyres are laying on the floor close to the fellies. Just small flames in these parts.
42 „	The flames in the remaining parts of the tyres are put out by use of water.

The vehicle was inspected after cooling. The outer plate in the aluminium wall sections was melted above the heat shield in height of 500 mm and a maximum width of about 650 mm. There was an opening in the inner plate in the wall sections with maximum height and width of about 150 mm. The floor/corner section was melted in a length of about 1100 mm.

The wooden pallets were partly carbonized on the underside. There was melted a hole with dimensions about 150 mm x 260 mm in the aluminium punched hole plank close to the wall. This plank was also slightly buckled. No parts of the other planks were melted, but number 2 and 3 from the wall had small deformations caused by the load. The largest deformation of 30 mm was measured on plank number 2 from the wall.

The aluminium floor sections were melted above the heat shield in a length of about 1200 mm and a width of about 500 mm. The stiffeners on the underside of the floor sections to the side of the heat shield were partly melted in an area of about 200 x 200 mm. See photo 8.D.

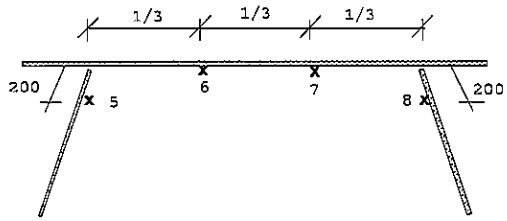

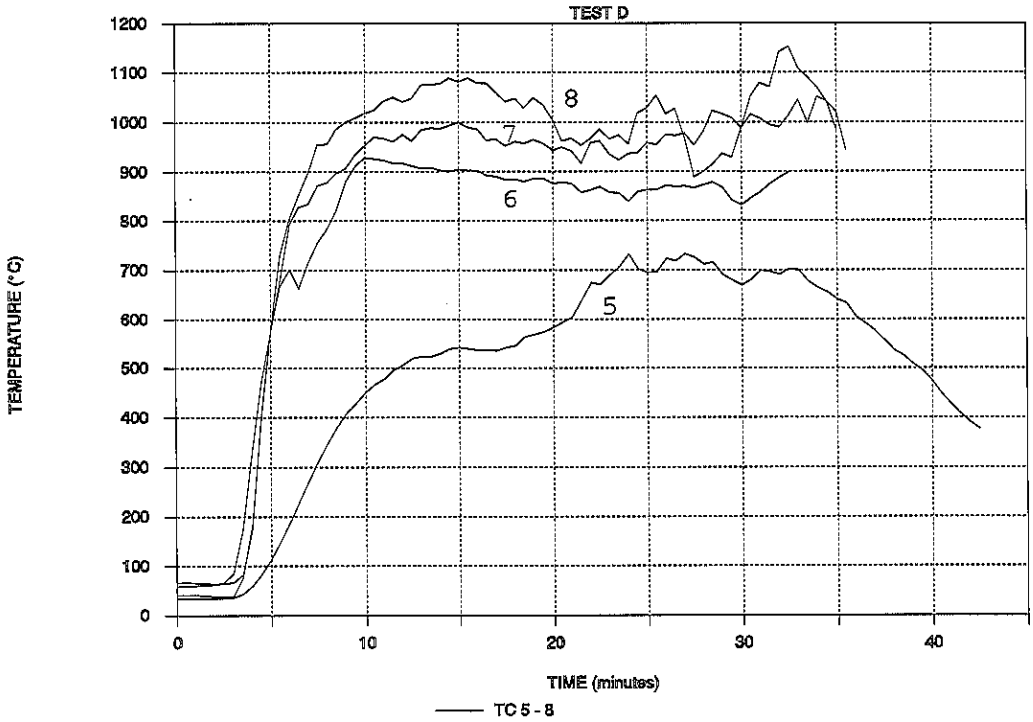

Test D. Position of thermocouples and temperature development on the heat shield during combustion of the tyres. Time in minutes from pilot ignition.

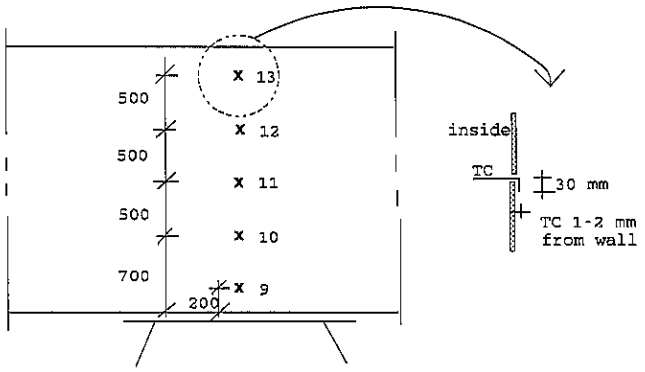

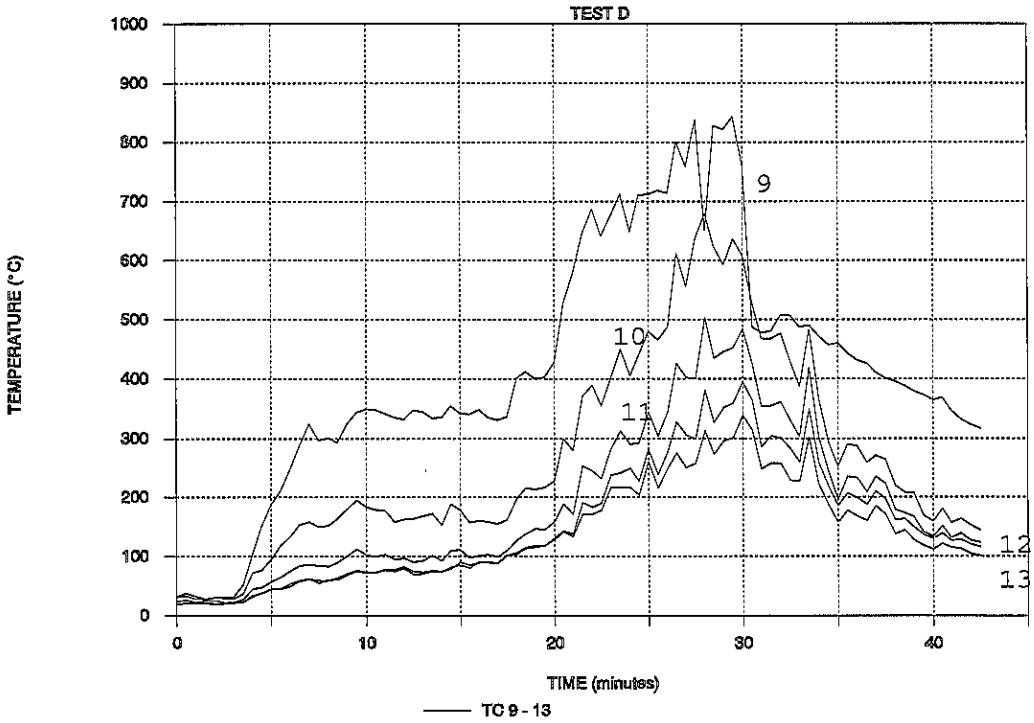

Test D. Position of thermocouples and temperature development in the air above the heat shield during combustion of the tyres. Time in minutes from pilot ignition.

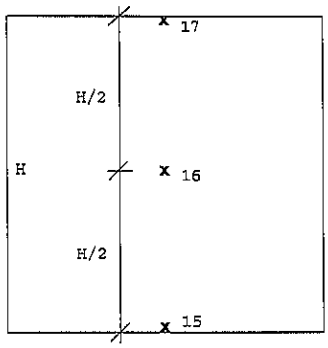

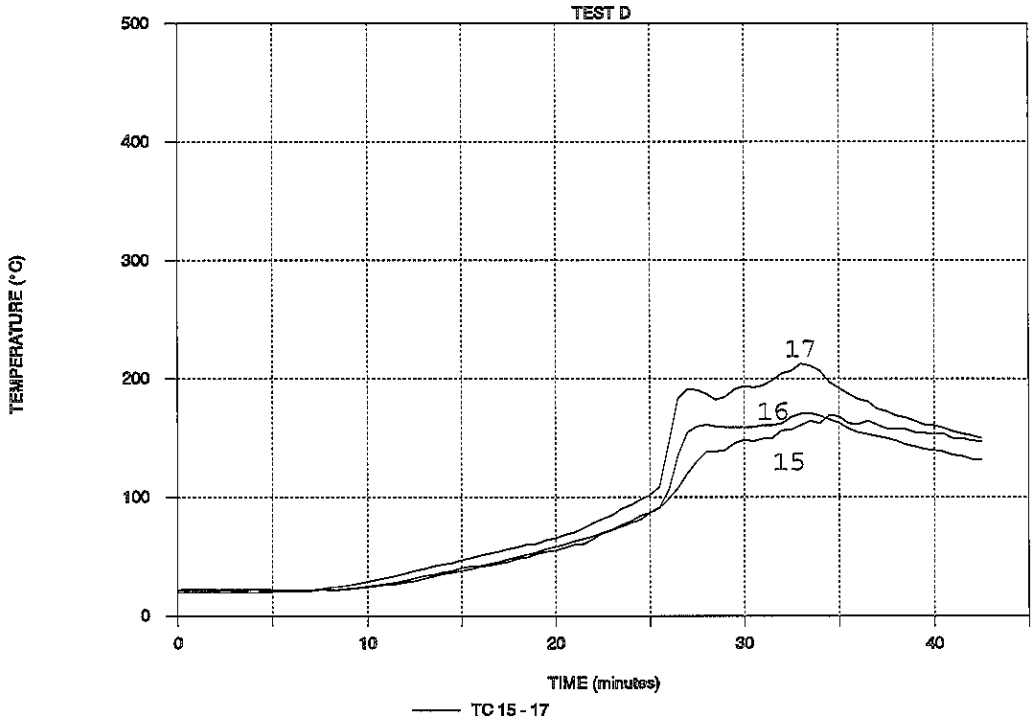

Test D. Position of thermocouples and temperature development in the air inside the vehicle during combustion of the tyres. Time in minutes from pilot ignition.

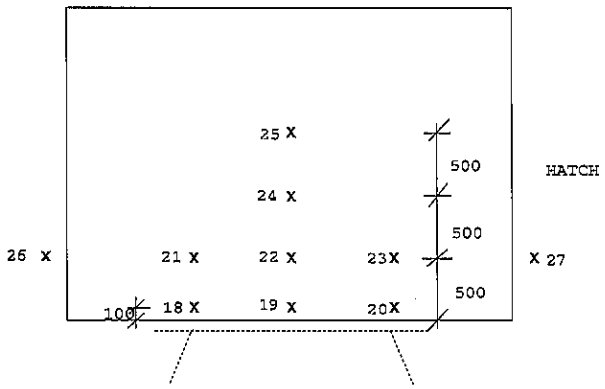

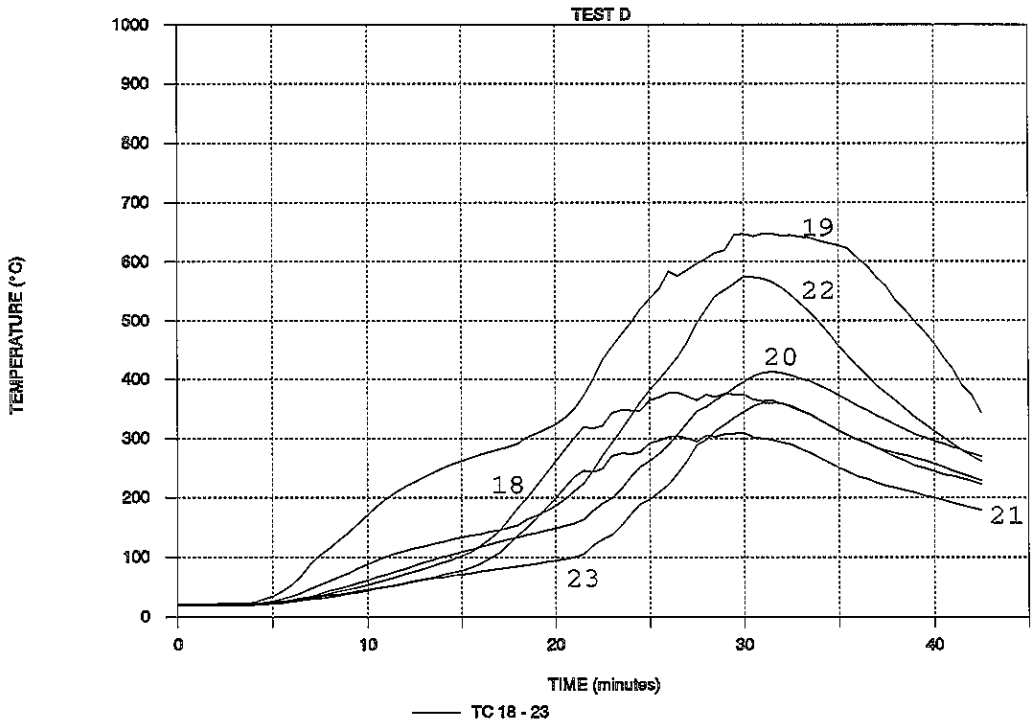

Test D. Position of thermocouples and temperature development on the aluminium wall sections inside the vehicle during combustion of the tyres. Time in minutes from pilot ignition.

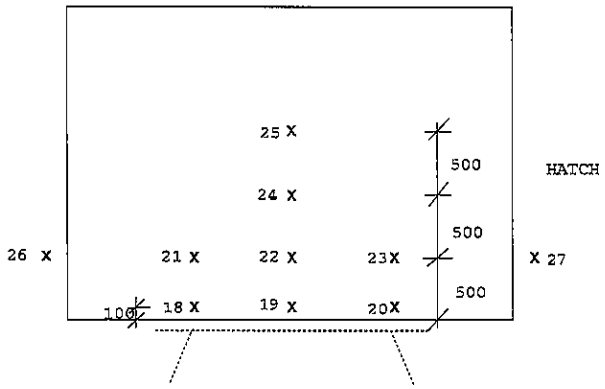

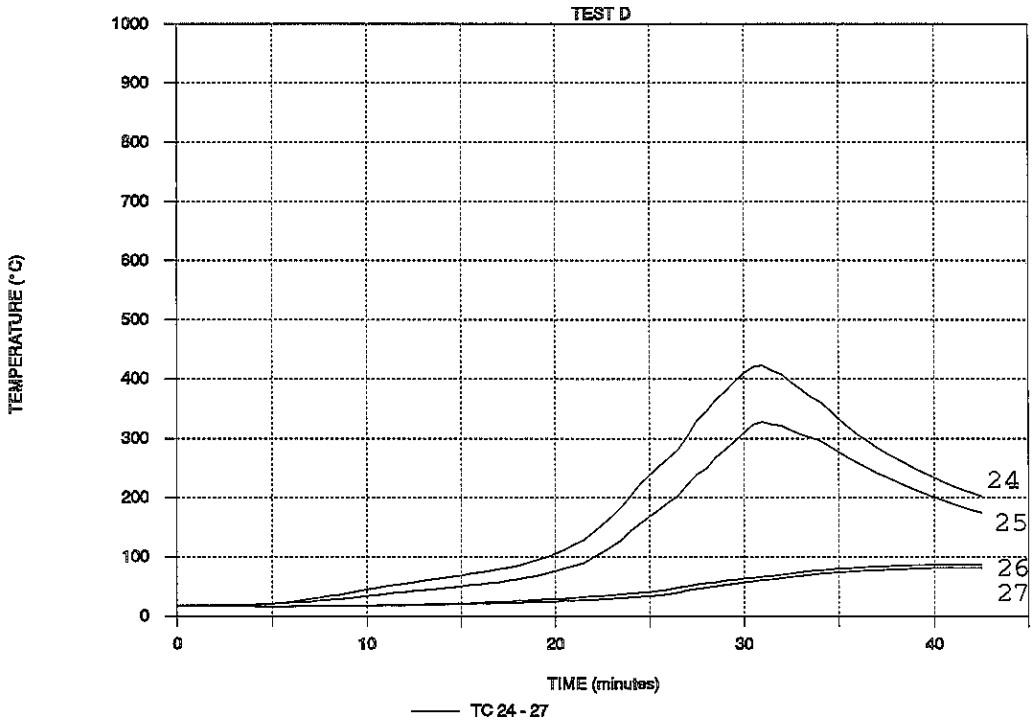

Test D. Position of thermocouples and temperature development on the aluminium wall sections inside the vehicle during combustion of the tyres. Thermocuples 26 and 27 are on the end-walls located 100 mm from the wall corner. Time in minutes from pilot ignition.

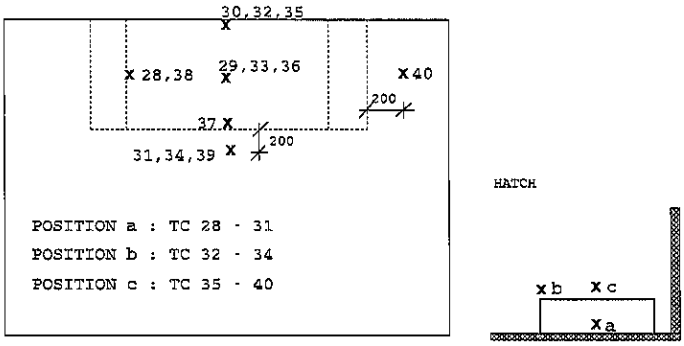

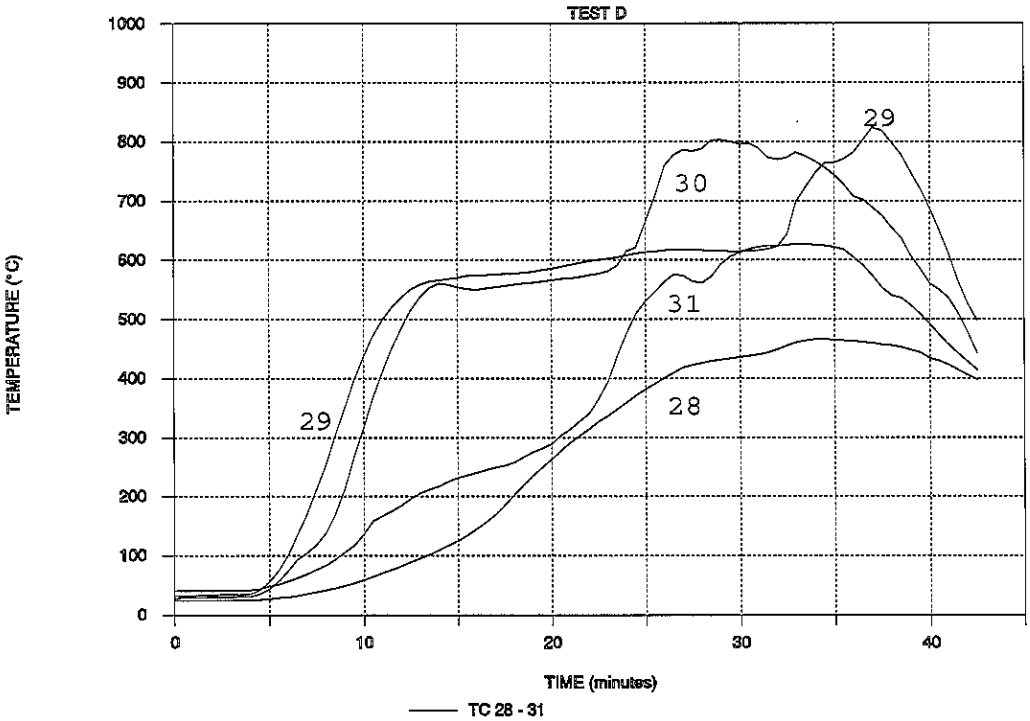

Test D. Position of thermocouples and temperature development on the aluminium floor sections inside the vehicle during combustion of the tyres. Time in minutes from pilot ignition.

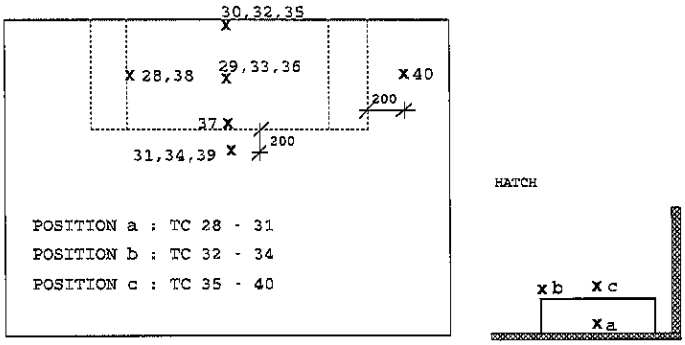

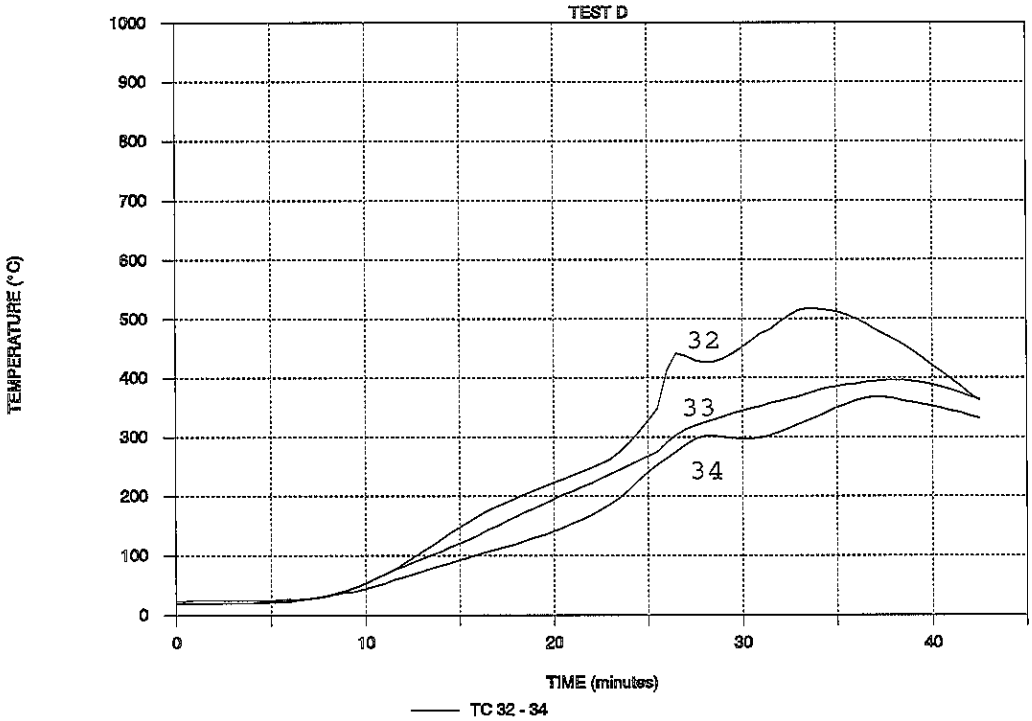

Test D. Position of thermocouples and temperature development on the edge of the aluminium planks on the floor sections inside the vehicle during combustion of the tyres. Time in minutes from pilot ignition.

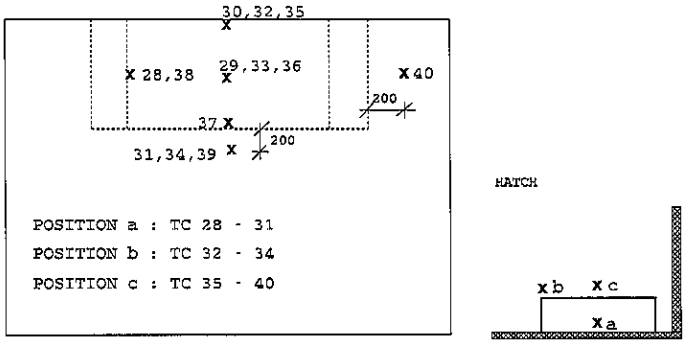

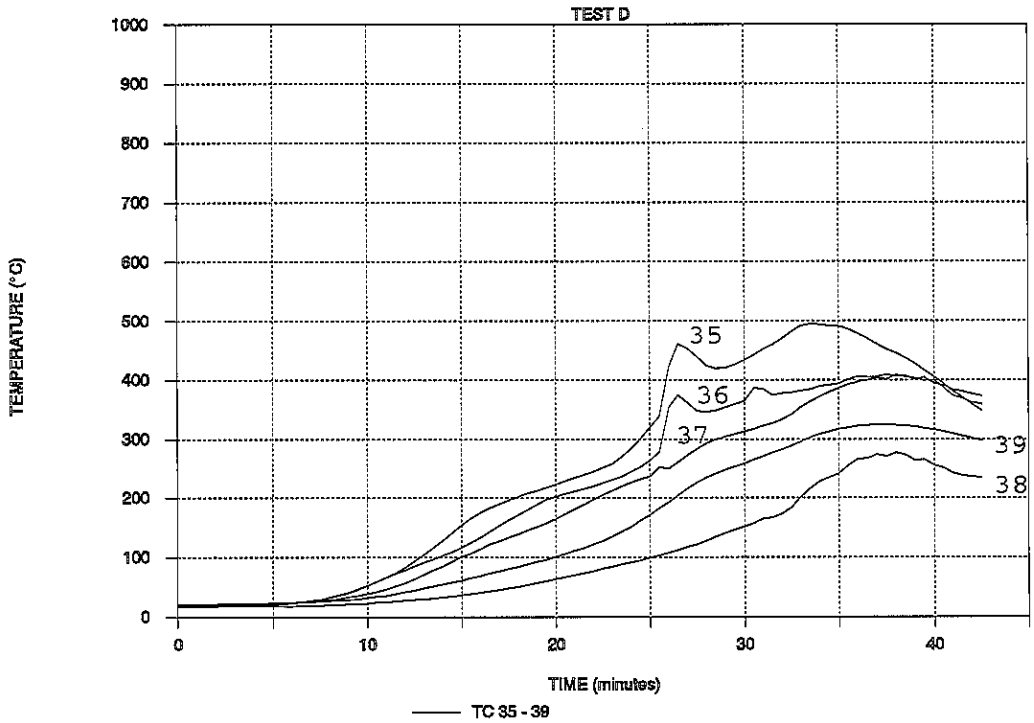

Test D. Position of thermocouples and temperature development in the middle of the aluminium planks on the floor sections inside the vehicle during combustion of the tyres. Thermocouple no. 40 was out of function. Time in minutes from pilot ignition.

PHOTOS FROM TEST D

Photo 1.D *Inside the vehichle before testing. Notice the wooden pallets with the concrete blocks.*

Photo 2.D *7 minutes after pilot ignition.*

Photo 3.D *26 minutes after pilot ignition.*

Photo 4.D *Inside the vehicle after testing and removal of the load. Notice the melted parts of the wall sections and the plank.*

Photo 5.D *Inside the vehicle after removal of the punched hole planks.*

Photo 6.D *Outside the vehicle after testing.*

Photo 7.D *The aluminium planks taken out from the vehicle. The plank on the right hand side was close to the wall during testing.*

Photo 8.D *The melted part of the stiffeners on the underside of the floor sections.*

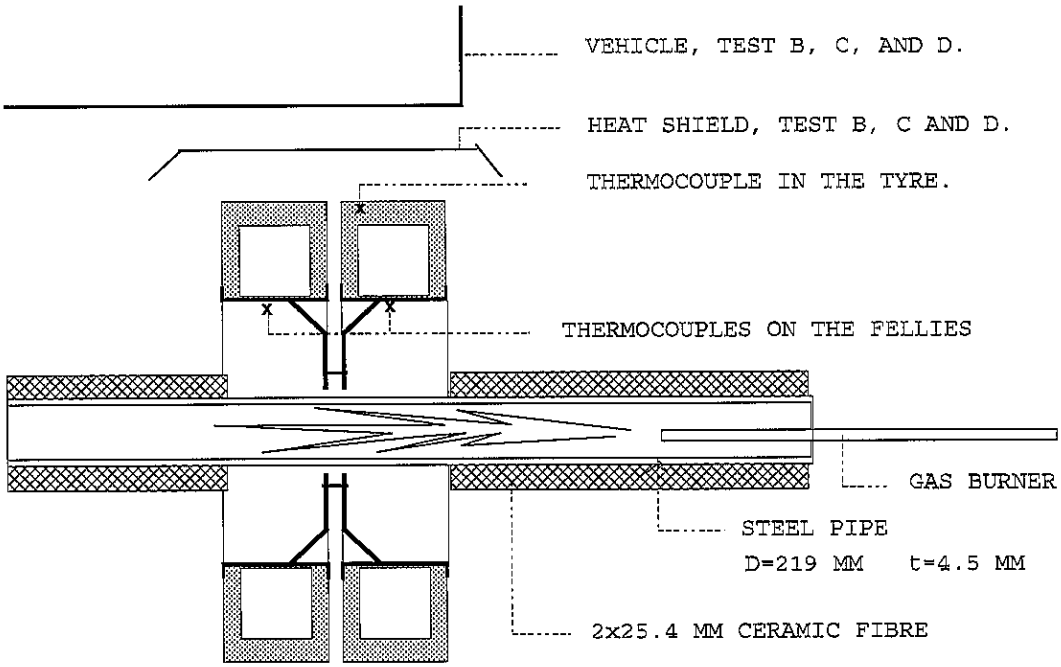

General test arrangement for pre-heating of the tyres before pilot ignition. This test arrangement for pre-heating is relevant for all the tests, A, B, C and D.

TYRES USED IN THE TESTS.

Test A: Dimensions 285/80 R 22.5.

Test B: Goodyear, 315/80 R 22.5, 156/149K, G 250 Unisteel, Tubeless, Regroovable.

Semeperit, 12 R 22.5, Tubeless, Regroovable, With Spikes.

Test C: Nokia, 295/80 R 22.5, 152/146M, Tubeless, Regroovable, With Spikes.

Michelin, 295/80 R 22,5, Regroovable.

Test D: Firestone, 12 R 22.5.

Michelin, 295/80 R 22.5, Regroovable.

DISTANCE BETWEEN TYRES AND HEAT SHIELD.

Position	10 o'clock	12 o'clock	2 o'clock
Test B	150 mm	190 mm	170 mm
Test C	470 mm	240 mm	450 mm
Test D	540 mm	220 mm	500 mm

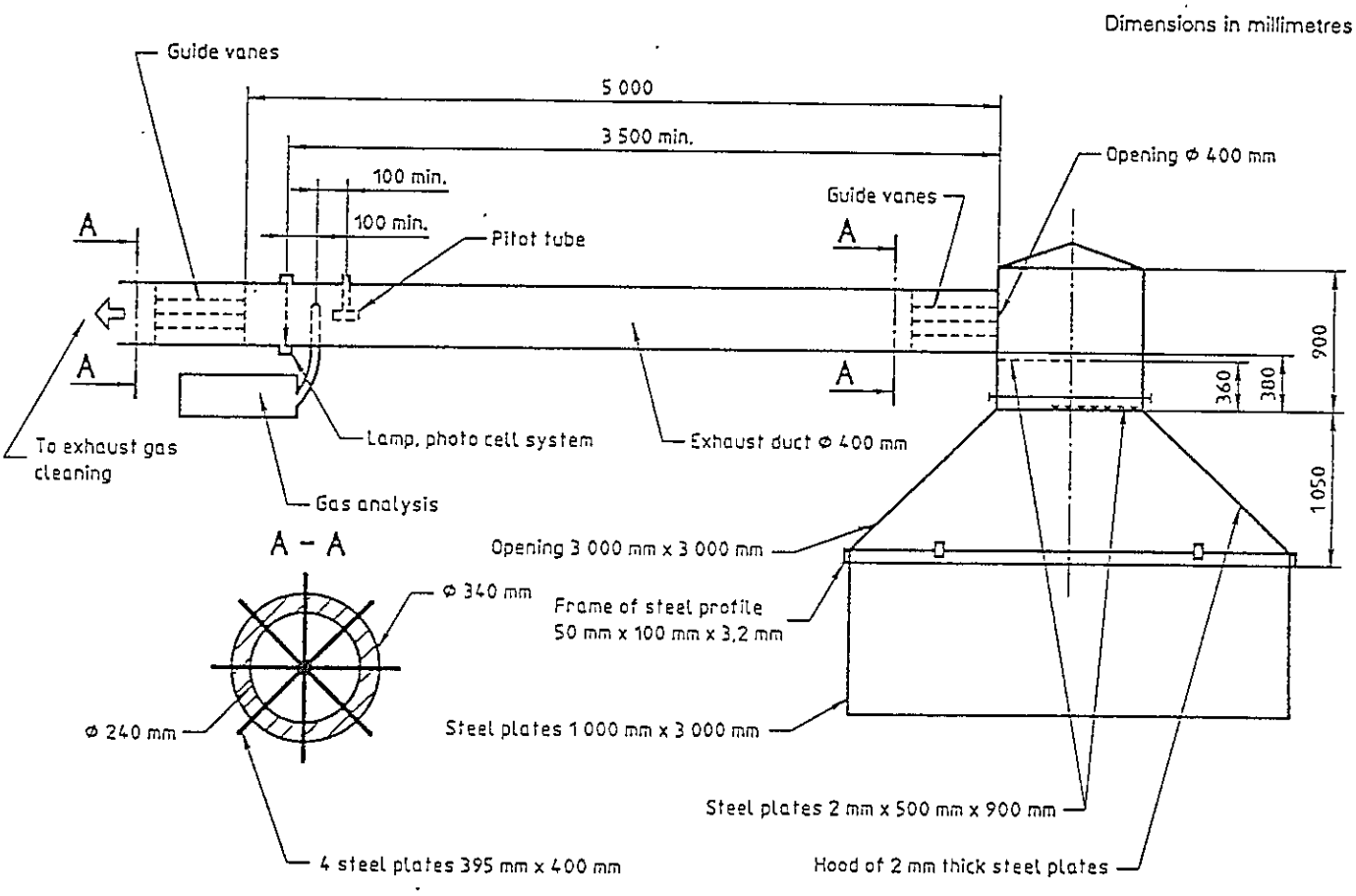

Details of exhaust system and location of sampling probes

Hood and exhaust duct in connection with test method ISO 9705 /3/, to decide the heat release rate. The test arrangement in connection with Test A and B was placed under this hood.

THERMOCOUPLES USED IN THE TESTS

Sheathed thermocouples type K with diameter 1.5 mm, temperature rating 1260°C.

These thermocouples were used to measure temperatures in the air outside and inside of the vehicle, in the tyres and between Plywood and floor sections in Test C (thermocouple no. 35).

Wire thermocouples K20-1-314, wire diameter 0.81 mm, temperature rating 704°C.

These thermocouples were used to measure temperatures on the fellies and heat shields. They were welded to the surface.

Wire thermocouples K28-2-305, temperature rating 482°C.

These thermocouples were used to measure surface temperatures inside of the vehicle. The thermocouples were made according to description in ISO 834, /4/.

Photos of the frame with the heat shields before the vehicle was installed. This was used for test C and D.

SECTION B-B
M 1:5

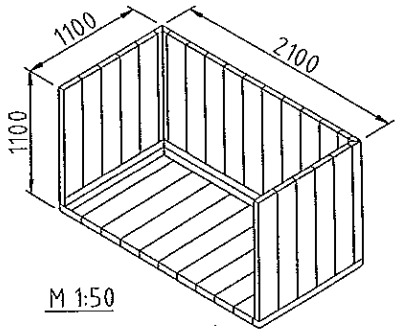

M 1:50

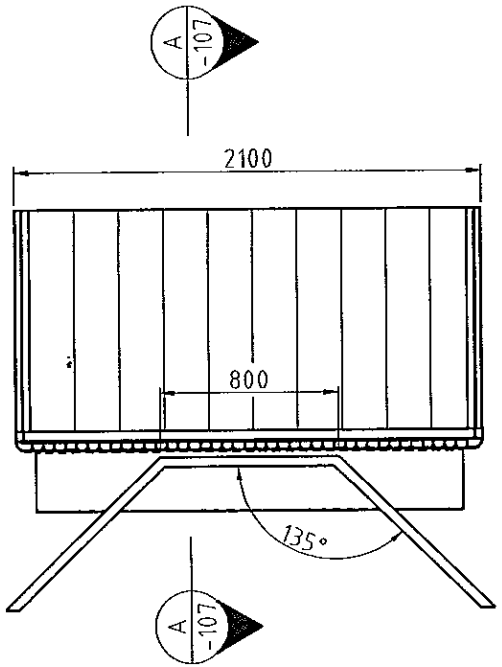

Side view

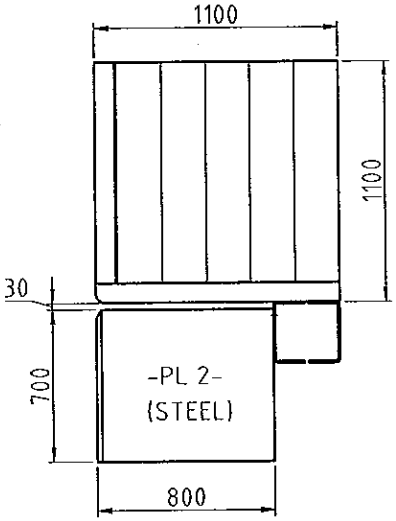

End view

MATERIAL: AlMgSi 6063
PROFILE SURFACE: ANODIZED

Dato 05.04.95	Konstr./Tegnet GS	Tracet	Målestokk 1:25 (A3)	Hydro Aluminium Hydro Trans
Kontr.	Standkontr.	Godkjent		
BOX 2100x1100x1100 (LxWxH)				Erstatning for: / Erstattet av:
				321-105
Henvisning: 321-104, -107		Beregning:		Filnavn: T:\INDUSTRI\HYTRANS\321-105

APPENDIX E.6

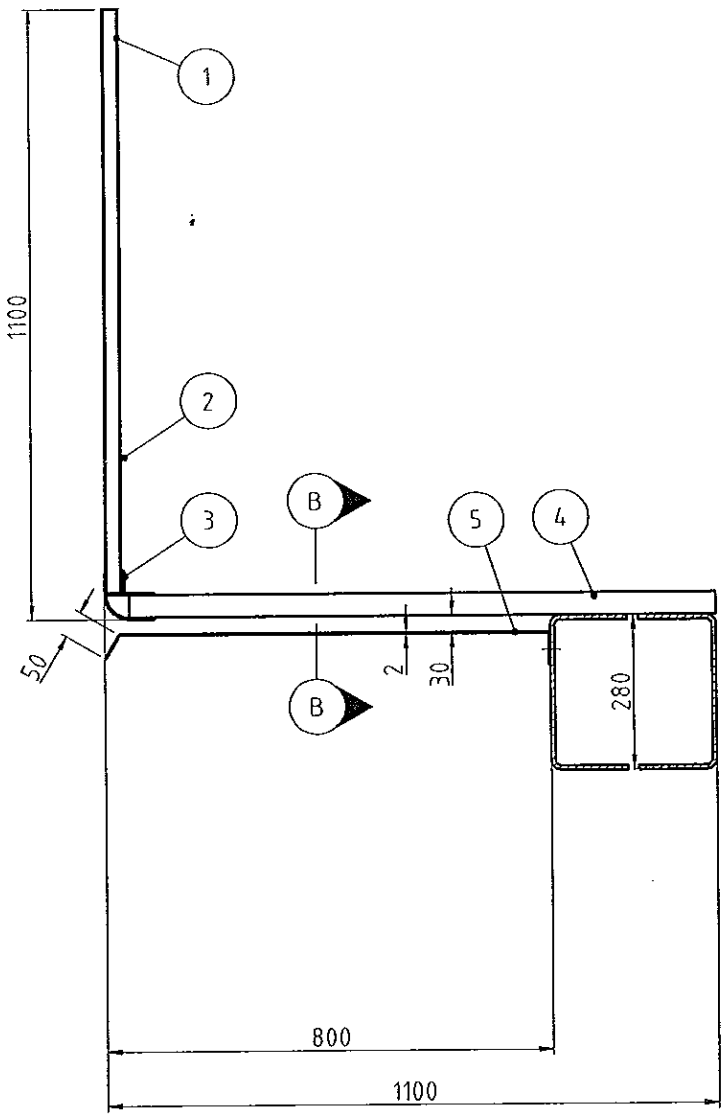

SECTION A-A

REF. 321-105
M 1:10

SECTION B-B

M 1:5

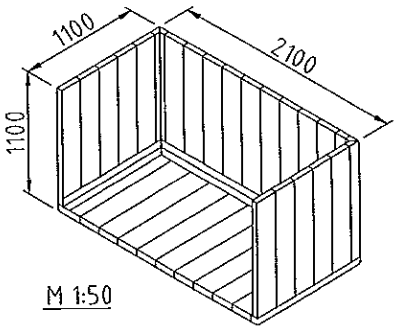

M 1:50

Pos nr	Antall	Beskrivelse	Spesifikasjon
5	-	MUDGUARD	PLT 2 MM (STEEL)
4	-	FLOOR SECTION	XTR 329
3	-	FLOOR CORNER SECTION	XTR 451
2	-	WALL CORNER SECTION	XTR 450
1	-	WALL SECTION	XTR 614

MATERIAL: AlMgSi 6063
PROFILE SURFACE: ANODIZED

Dato 05.04.95	Konstr./Tegnet GS	Tracet	Målestokk 1:25 (A3)
Kontr.	Standkontr.	Godkjent	

Hydro Aluminium
Hydro Trans

BOX
2100x1100x1100 (LxWxH)

Erstatning for: | Erstattet av:

321-107

Henvisning: 321-104, -105
Beregning.
Filnavn: T:\INDUSTRI\HYTRANS\321-107

APPENDIX E.7

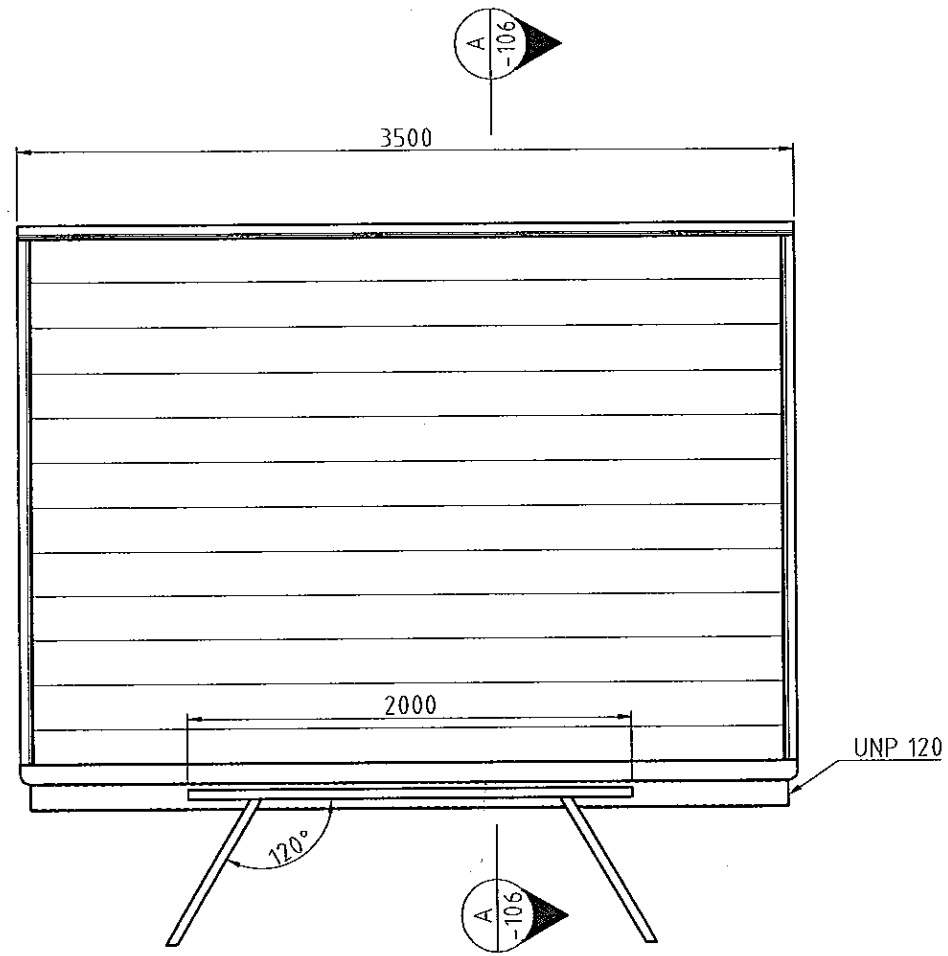

Side view

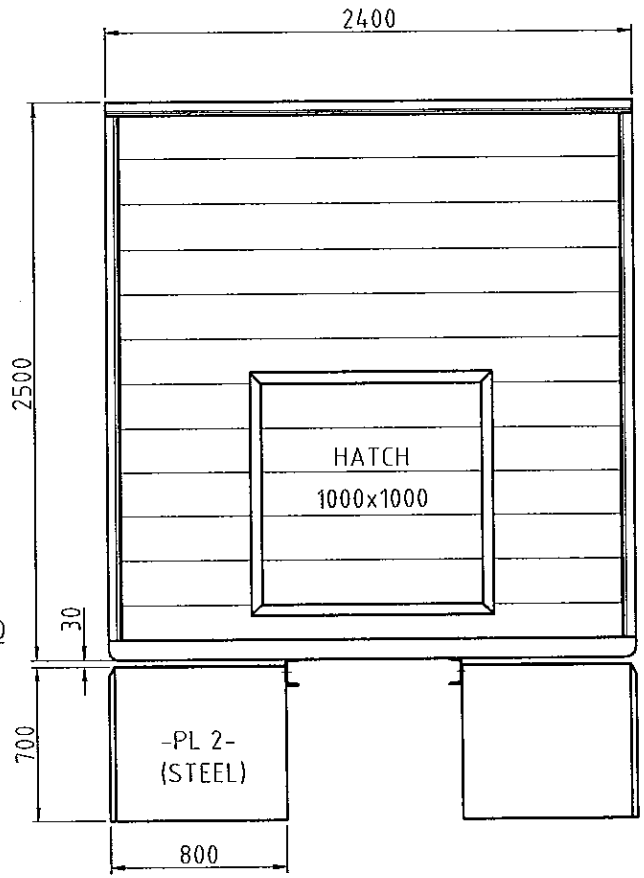

End view

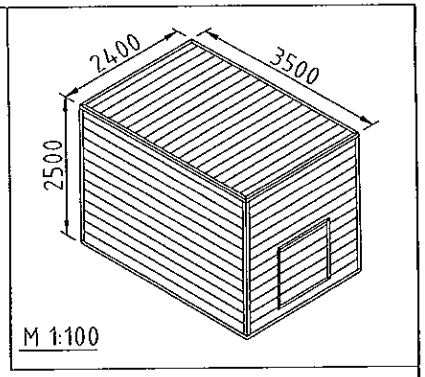

MATERIAL: AlMgSi 6063
PROFILE SURFACE: ANODIZED

Dato 05.04.95	Konstr./Tegnet GS	Tracet	Målestokk 1:25 (A3)	Hydro Aluminium Hydro Trans
Kontr.	Stand.kontr.	Godkjent		
BOX 3500x2400x2500 (LxWxH)				Erstatning for: / Erstattet av:
				321-103
Henvisning: 321-104, -106	Beregning:			Filnavn: T:\INDUSTRI\HYTRANS\321-103

APPENDIX E.8

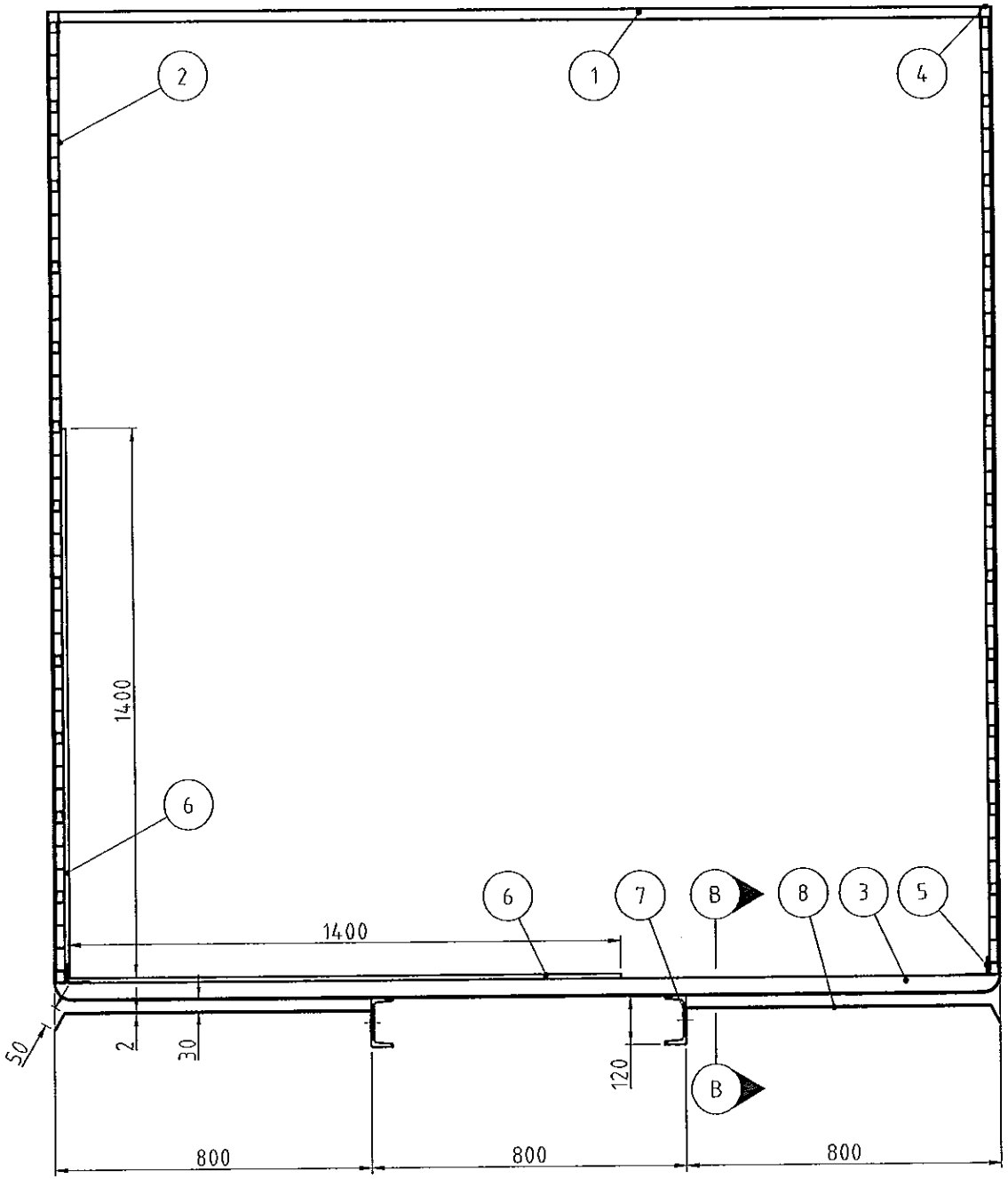

SECTION A-A

REF. 321-103

M 1:12.5

SECTION B-B

M 1:5

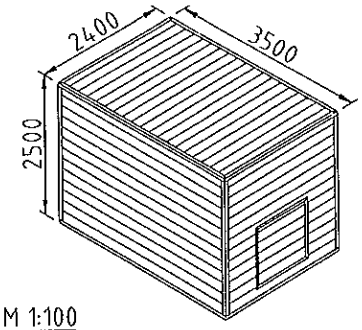

M 1:100

Pos nr	Antall	Beskrivelse	Spesifikasjon
8	-	MUDGUARD	PLT 2 MM (STEEL)
7	-	FRAME	UNP 120
6	-	PLYWOOD	12 MM
5	-	FLOOR CORNER SECTION	XTR 451
4	-	ROOF/WALL CORNER SECTION	XTR 759
3	-	FLOOR SECTION	XTR 329
2	-	WALL SECTION	XTR 652
1	-	ROOF SECTION	XTR 652

MATERIAL: AlMgSi 6063
PROFILE SURFACE: ANODIZED

Dato 05.04.95	Konstr./Tegnet GS	Tracet	Målestokk 1:25 (A3)
Kontr.	Standkontr.	Godkjent	

Hydro Aluminium
Hydro Trans

BOX
3500x2400x2500 (LxWxH)

Erstatning for: | Erstattet av:

321-106

Henvisning: 321-103, -104

Beregning:

Filnavn: T:\INDUSTRI\HYTRANS\321-106

APPENDIX E 9

XTR 329

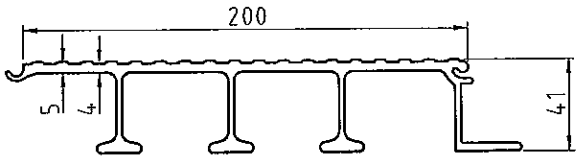

XTR 614

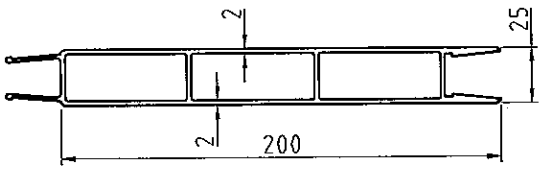

XTR 451

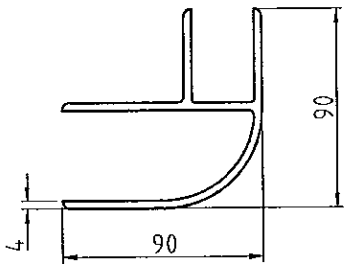

XTR 652

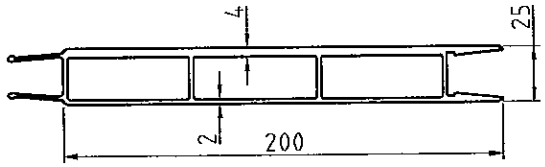

XTR 450

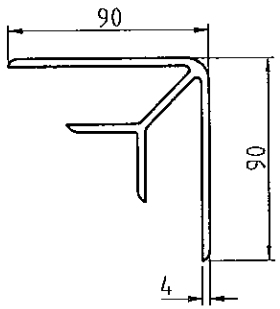

XTR 759

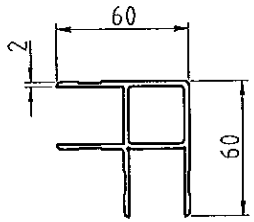

MATERIAL: AlMgSi 6063
PROFILE SURFACE: ANODIZED

Dato 05.04.95	Konstr./Tegnet GS	Tracet	Målestokk 1:2.5 (A3)	Hydro Aluminium Hydro Trans
Kontr.	Stand.kontr.	Godkjent		
PROFILES REF. BOX 321-103 & 321-105				Erstatning for: / Erstattet av:
				321-104
Henvisning.	Beregning:			Filnavn: T:\INDUSTRI\HYTRANS\321-10/

APPENDIX E.10

ORMINSKET — REDUSERT 100 mm

STNTRR NRT. 251736

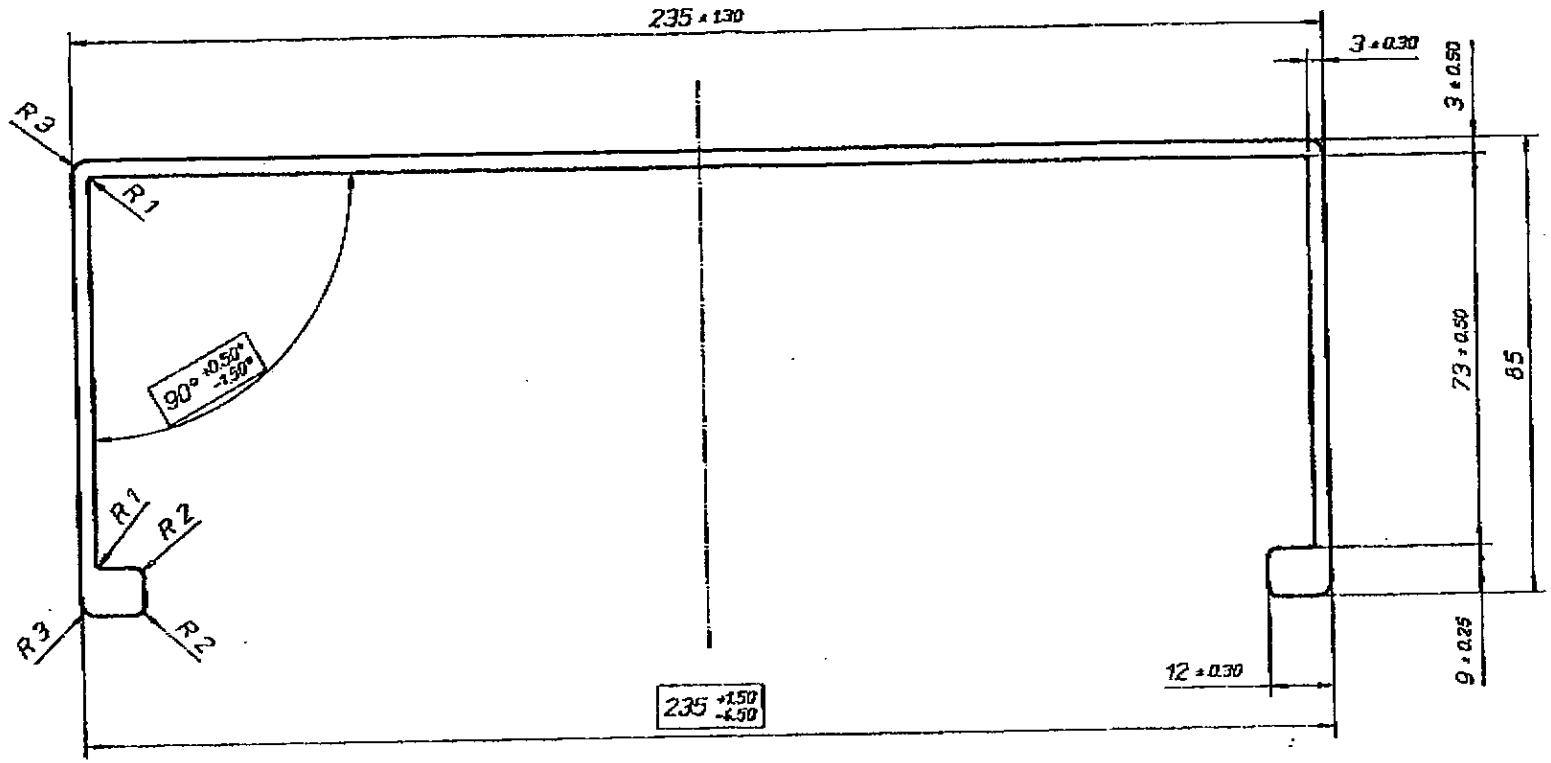

Z = R
X = R
F = Full rad.

APPENDIX 1

Spesial toleranse / Special tolerance	Toleranse standard / Tolerance standard: Verkesstandard		Gen. vegg / Gen. wall	Gen. hjørne rad. / Gen. corner rad.
Iyc = 11693699 mm⁴	Kunde/Customer: HYDRO ALUMINIUM PROFILER KARMØY		HYDRO ALUMINIUM Profiler	
Ixc = 1316468 mm⁴	Bruksområde/Application: Sklaspolank			
Yc = 58,92 mm	Del nr./Part no.: Profil A	Overflate/Finish: 4	Målestok/Scale: 1:1	Sign.: O.G. Dato/Date: 23.02.88
Xc = 117,5 mm	Vekt/Weight: 3.639 kg/m	Rainnder: 829 mm	Dokst/Size: 247	Tilb. nr. / Form no.: 1824
Areal / Area: 1348 mm²	Salgsgr. nr.	Synlig side / Visible surface: — — —	Farge: 82	Profil nr./Section no.: ALN 0234
Legering/Alloy: 6082 T6	Bruksområde/Applikasjonslengde: 3000 mm	Passende profil/Fit with: Profil B	Klass: S	
Conc. / Art. nr.: 2801/1				

Revisjon: Dato / Sign.